# R & R Machine Works Inc.

We really appreciate you making this purchase from us and we hope the equipment meets your expectations. We strive to sell equipment that will make your business as well as ours, prosper. When you have future equipment or service needs please think of us first!

If we can be of further services to you or your company,

please call us at (806) 244-5686.

Sincerely,

Owners and Management

Dalhart R&R Machine Works, Inc.

# Table of Contents

# Introduction

Your new flaker is a quality flaking mill that will give you many years of low cost operation if given the proper amount of care and maintenance.

Your mill has been engineered and designed with simplicity of operation in mind, but first and foremost to give the best quality product at maximum operating capacity.

Your flaker manufacturer stands ready to serve you at any time with service, whether it be in the form of maintenance and operating instructions, or on location with help performed by a qualified factory representative.

Your flaker manufacturer has on hand at all times any replacement part for your mill that you will need, and also a supply of rolls corrugated and journaled to fit your mill and your operation.

# Safety

Remember, YOU are the key to safety. Good safety practices not only protect you, but also the people around you. Make these practices a working part of your safety program. Be certain that everyone operating this equipment is familiar with the recommended operating and maintenance procedures and follows all the safety precautions. Most accidents can be prevented. Do not risk injury or death by ignoring good safety practices.

## OPERATING SAFETY

1. Read and understand the Operator's Manual and all safety signs before using.
2. Before servicing, adjusting, repairing, or maintaining unit, ensure that unit power source is completely shut down, and cannot start-up (locked out).
3. Do not operate when any guards are damaged or removed. Install and secure guards before starting.
4. Keep hands, feet, clothing, and hair away from all moving and/or rotating parts.
5. Wear appropriate ear protection when operating for long periods of time.
6. Review safety items with all personnel routinely.

- **DO NOT** modify the equipment in any way. Unauthorized modification will affect the warranty and may impair the function and / or safety and could affect the life of the equipment.
- **DO NOT** make any adjustments or repairs on the equipment while the machine is running.
- On a dual drive machine, tighten HTD belts **ONLY** when rolls are **CLOSED**.

## SIGNAL WORDS:

Note the use of the signal words DANGER, WARNING, and CAUTION with the safety messages. The
appropriate signal word for each message has been selected using the following guidelines:

**DANGER** - Indicates an imminently hazardous situation that, if not avoided, will result in death
or serious injury. This signal word is to be limited to the most extreme situations, typically for
machine components that, for functional purposes, cannot be guarded.

**WARNING** - Indicates a potentially hazardous situation that, if not avoided, could result in death
or serious injury and includes hazards that are exposed when guards are removed. It may be also
used to alert against unsafe practices.

**CAUTION** - Indicates a potentially hazardous situation that, if not avoided, may result in minor
or moderate injury. It may be also used to alert against unsafe practices.




**SAFETY SIGN REPLACEMENT**

1. Keep safety signs clean and legible always.
2. Replace safety signs that are missing or have become illegible.
3. Replaced parts that displayed a safety sign should also display the current sign.
4. Safety signs are available from R and R Machine.

# Operating Instructions for Feed Rolls

Feed Mill Rolls have a long life provided they are carefully maintained.

The following instructions should be observed:

1. The material to be crushed must be evenly distributed over the whole barrel length of the roll to avoid excessive wear on any surface. If, because of uneven wear or other factors, there is a direct metal to metal roll pressure, the specific load at such points may be so high as to result in work hardening. This may eventually lead to cracks and spalling at the barrel edges. Optimum performance is only obtained if the roll body wears equally all over and if local pressure applications are avoided, especially at points near the barrel edges.
2. The saddle parts should never be placed tightly on the rolls. This would result in frictional heat which might damage the roll surface. It is important to provide a clearance between the saddle and the roll which correspond approximately to the size of a flake.
3. Mineral impurities in the grain such as sand, stones and metallic components, increase the wear or can even destroy the barrel surface. For this reason, it is important to clean the grain before processing.
4. The mill should be started up and shut down with feed material in the roll gap. If this is not possible, metal to metal running should take place for the shortest possible period only. Metallic contact under pressure between revolving rolls may lead to high specific compression loads at certain points of the roll surface.
5. The mill should be stopped immediately if the supply of grain is interrupted.
6. To avoid spalling, it is helpful to chamfer the roll edges slightly. This should be carried out over a minimum length of 2”. This process alone, however, does not provide adequate protection against damage to the barrel ends.
7. Regrinding of rolls should be done at regular intervals, the frequency of which will depend on the type and rate of feed and the volume of impurities.
8. It is essential that the rolls in operation should be inspected regularly. Before spalling or cracks appear, the surface becomes shiny. At that point it is absolutely essential to regrind the roll edges in the roll frame or to remove the rolls and regrind them on a special grinding lathe.
9. Damaged rolls should be repaired only by a specialist company.

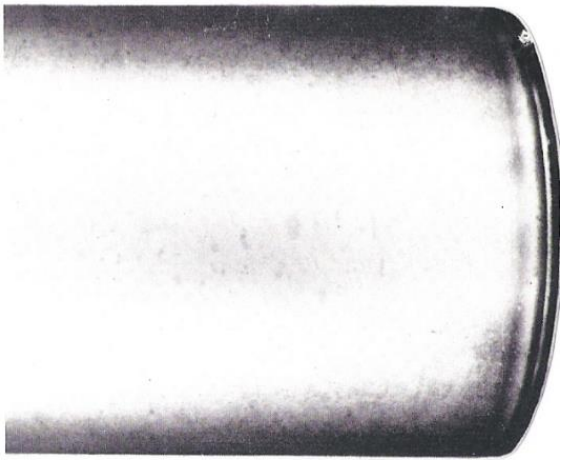

Pictured above: Chilled cast iron
Roll after a certain operation time.
This body surface indicates
well aligned and uniform wear.

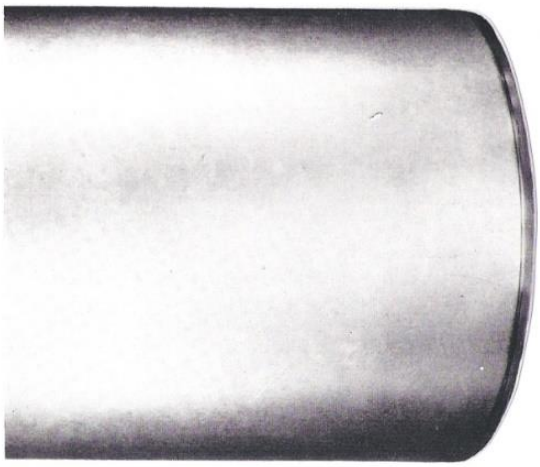

Shining areas and worn out saddles
This indicates that the roll has not
run in proper alignment.

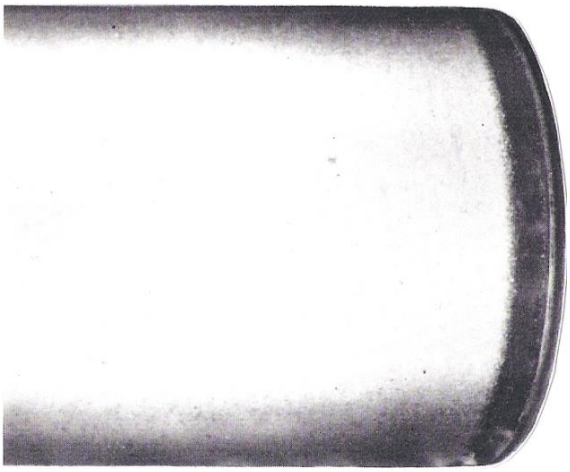

The shining barrel end indicates metal to
metal running. Regrinding is necessary
otherwise……..

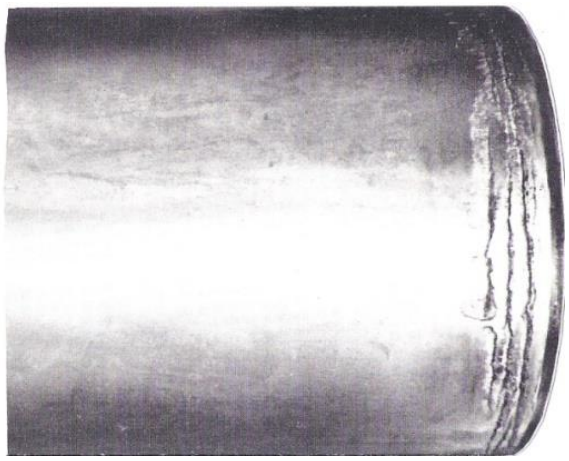

…spalling will appear as in the above
picture.

# Steam Flake Processing

There are four basic criteria that are controlled by the milling operator that have a significant effect on grain processing. They are:

1. Grain Moisture
2. Cook Time (time in the steam cabinet)
3. Grain Temperature
4. Grain Flake Bushel Weight

Each of the areas must be addressed in order to assure proper and adequate grain processing, regardless of grain involved.

**GRAIN MOISTURE** –Moisture is required within the grain kernel in order to provide steam expansion of the kernel during the cooking process and maximize the gelatinization of starch when passing through the rolls. The desired moisture level of the grain after processing is 21 percent. Because endogenous moisture varies depending on time in storage, harvest conditions, etc., the moisture addition through conditioning must be monitored regularly, and changes made if grain becomes too wet or too dry.

It is normally anticipated that we will pick up three to four percent moisture from steam in the cabinet when boiler pressure is 80 to 90 pounds. Based on the moisture of incoming grain, the grain conditioner should be calibrated accordingly.

**COOKING TIME** –The time spent in the steam cabinet at steam temperature, which is about 206 deg. F, at 3800 feet elevation, is necessary to improve the starch availability. It is this portion of the process that determines the improved conversion of starch to glucose in the rumen. For most grain, specifically corn or milo, the “cook time” necessary is about 45 minutes. Excessive cooking time (more than one hour) is not harmful but may cause some mechanical problems such as wrapping. The time spent cooking will be determined based on run time and total tons processed.

**GRAIN TEMPERATURE** –Grain in the steam cabinet will equilibrate at the aforementioned steam temperature of about 206-210 deg. F. The primary purpose of the steam is to heat the grain. When grains are extremely wet, i.e. right after harvest, the boiler pressure may be increased to provide the same temperature with less water (dry steam). That can be accomplished around 90 to 100 psi boiler pressure.

The grain should be heated for about 15 minutes prior to the start of the rolls. Maximum effectiveness is not reached until 30 to 40 minutes into the rolling process, after the rolls have heated and the process becomes uniform and consistent. Once temperatures are reached throughout the system, adjustments to high and low steam injection can be made (reduced) to improve the cost efficiency of boiler operation.

**FLAKE BUSHEL WEIGHT** –Without this final process all the foregoing effort is for naught. The rolling process finalizes the gelatinization process and makes it irreversible. And, in the case of milo, disrupts the protein matrix that surrounds the starch granule. Without the roller process, the grain would dry and return to its pretreatment status with no improvement in utilization of starch.

Flake bushel weight can be measured directly from beneath the rolls. The flake weight for corn should be from 27 to 28 pounds per bushel and the flake weight for milo should be 24 to 26 pounds per bushel. Weights above these levels will not produce the desired percentage of starch gelatinization and weights below these values will not appreciably improve utilization and will only result in added roll wear.

Flake weights must be determined to each side of the rolls since they are independently adjustable. There should be no more than two pounds per bushel difference between the sides.

The rolls are corrugated specifically for the grain to be processed. The corn rolls normally have 14 corrugations per inch and the milo rolls normally have 16 corrugations per inch. If we determine that milo will be the only grain processed through a particular set of rolls, we may suggest an 18 corrugation.

Maintaining maximum recommended amps on the rolls during processing provides for maximum tonnage production.

In summary, the objectives of grain processing are:

1. Maintain flake moisture at 21 percent.
2. Maintain a minimum cook time of 45 minutes.
3. Maintain maximum temperature, 206-208 degrees F.
4. Produce desirable flake bushel weight for the grain processed:

**Flaked Weight**
Corn – 27-28 lbs/bu
Milo -25-26 lbs/bu
Barley-26-27 lbs/bu
Wheat-30-33 lbs/bu

By doing these four things consistently, you will experience a marked improvement in efficiency of feed utilization and increased profit for both the feed yard and the cattle feeders.
The installation of your grain cleaner should be carefully planned and well-engineered.

# Installation

The installation of your flaking mill should be carefully planned and well-engineered.

The following points should be followed to get the most out of your roller mill, both in capacity and quality:

1. There should be sufficient space around the machine for adjustments, repairs and removal of rolls for recorrugation.
2. The mill should be installed on a level surface capable of withstanding the weight of the mill. Micro/Level Isolators are ideal to place between the mill and the floor or stand that the mill is to be mounted on.
3. If the surface is not level, shims or grout should be used to avoid warping or binding the frame.
4. Install motor and drive as recommended by the factory. If the motor base or rails are not mounted, the motor must be fastened securely and the V –Belt aligned with the available space to tighten belts at a later time.
5. Provisions should be made to adequately feed the Mill.
6. Provisions must be adequate to take the product from the Mill. This is usually done by any of several methods.
7. The discharged grain is hot and moist when a steamer is used. This moisture in the grain is very corrosive, therefore, proper conveying is very important. If the grain is to be stored, proper cooling is a must.
8. Rolls must be kept in TRAM at all times. It is especially important when rolls are changed.

**RECOMMENDED LIST OF SPARE PARTS:**

1. If operating more than one mill, or in a case where a shut down for recorrugation hampers the overall operation, a spare set of rolls is recommended.
2. It is not necessary, but if a spare set of rolls is equipped with housings, bearings and adapters, a roll change can be made in less than ¼ of the normal time.
3. Belts, hydraulic cylinders or other closure system parts..

# Pre-Operational Checklist

1. The rolls have been preset at the factory with a clearance of .015 when the rolls are drawn together.
2. All points requiring lubrication should be noted. Your mill has been lubricated at all points before leaving the factory.
3. Check all bolts for tightness.
4. Check all V-Belts for tightness.
5. Adjust SCR control at different settings to become familiar with its features.
6. Open and close the rolls several times to become acquainted with the mechanisms.

## Tips on operating your roller mill

The Roller Mill was designed to efficiently produce a high quality of commercial grade flaked grain. The capacity of your mill will be dependent on the following conditions, either singly or in combination:

1. Plumpness of kernel
2. Toughness of hull
3. Moisture content
4. Amount of conditioning, when steam is used
5. Thinness of flake desired
6. Foreign material in grain, particularly rocks
7. Corrugation on rolls
8. The RPM of your feeder bar

The capacity can be increased somewhat if the quality of the final product is not critical.

The rolls are usually set further apart when rolling corn because of the large kernel size. It may be necessary to adjust the roll clearance to obtain your desired final product.

As the corrugation begins to wear off you will notice a decrease in capacity at first, but as the corrugation becomes extremely dull, the capacity will be greatly reduced.

# Instructions for installation of re-corrugated rolls

**Note**: Before starting, make sure all parts are very clean.

1. Install the grease seal on back side of bearing housing.
2. Install bearing in bearing housing with large end of tapered bore toward back side of bearing housing.
3. To insure proper clearance for the installation of the bearing cap, and to prevent bearing from falling out of bearing housing, a lug needs bolted to the cap end of the bearing housing.
4. Clean journal, making sure the seal collar is well cleaned and install the dust shield. Install bearing adapter on journal with slotted nut and lock washer still attached. After adapter is fully under the collar, remove slotted nut and lock washer.
5. Spray a light coat of lubricant all over the adapter, slip bearing and housing over adapter making certain adapter stays under the seal collar. Slip lock washer on, then screw nut on snugly, but not tight.
6. Prepare other three journals up to this point.
7. Hoist rolls onto frame of the mill, secure with bolts and tighten bolts at this point.
8. Center the rolls inside the base of the mill and then wedge boards on each side of rolls to keep them from slipping during the next step.
9. Loosen adapter nuts the distance of three or four threads. Place two screwdrivers or 18” spoon bars be-hind the lock rings and pry the adapters out as far as possible. This causes the bearings to be drawn snugly into position and pulls adapter from under the shaft collar. *Caution should be exercised at this stage to prevent distortion of the threads on the adapter by the prying bars.
10. Use a spanner wrench and hammer to tighten slotted nuts, then bend tang of lock washer in to slot of lock nut.
11. Remove lugs installed in step 3.
12. Blow compressed air into the bearing to further clean it.
13. Use a grease gun with a flat tip to stick in between the balls of the bearing, pumping grease through to the backside of bearing until all the balls are packed with grease.
14. Install grease seal in bearing cap and half fill concave portion of bearing cap with grease, then bolt in place. You may place a small amount of silicone around the edges of the cap to help prevent wa-ter or foreign particles from entering the bearing.
15. Install front and back roll covers.
16. Install roll adjusting components. (i.e. hydraulic cylinder or tension rod assembly)

## Installation

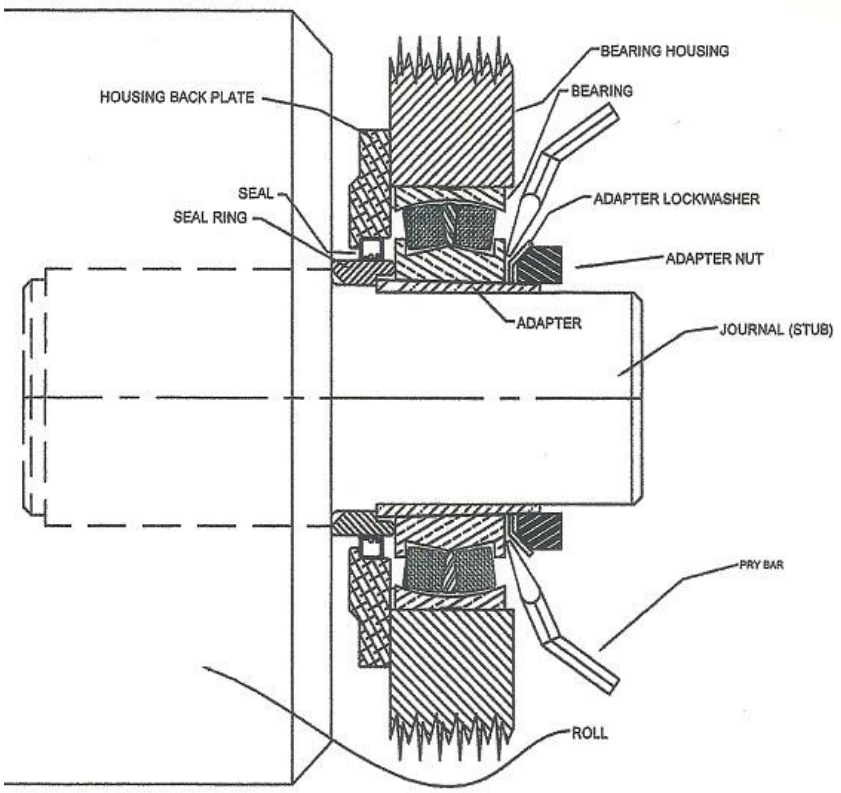


## Installed

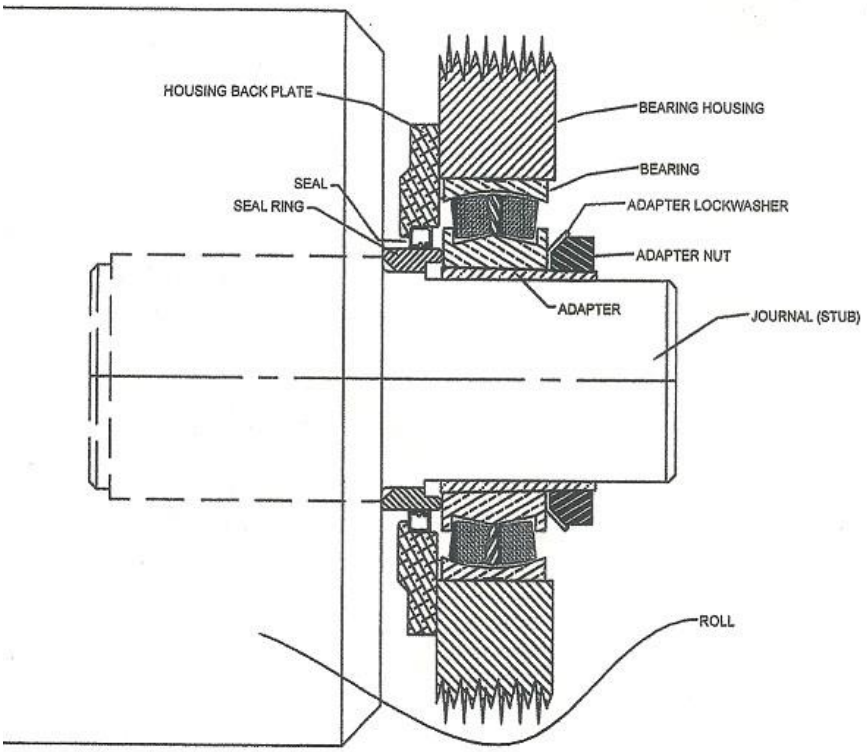

## Instructions for removing tapered roller bearings and adapters

CAUTION: Do not use a standard bearing puller because this will force the bearing on the journal tighter.

1. Remove the bearing housing cover plate.
2. Clean the excess grease off the slotted nut so the tangs of the lock washer can be bent clear of the lock slots so the nut may be loosened.
3. The nut is then loosened in the following manner:
    a. The nut has right hand threads so it must be loosened in a counterclockwise direction.
    b. A soft steel bar or a spanner wrench is placed in one of the nut slots.
    c. Strike the bar or a spanner wrench with several sharp blows using a hammer.
    d. Loosen the nut until approximately three-fourths (3/4) of the threads are still in contact with the adapter.
    e. The factory uses a Bearing Knocker that is manufactured at the factory.
    f. Strike the Bearing Knocker on the end squarely with a sledgehammer and this will force the bearing adapter inside the shaft collar.
    g. Then the bearing housing, bearing and adapter will slip easily off the journal

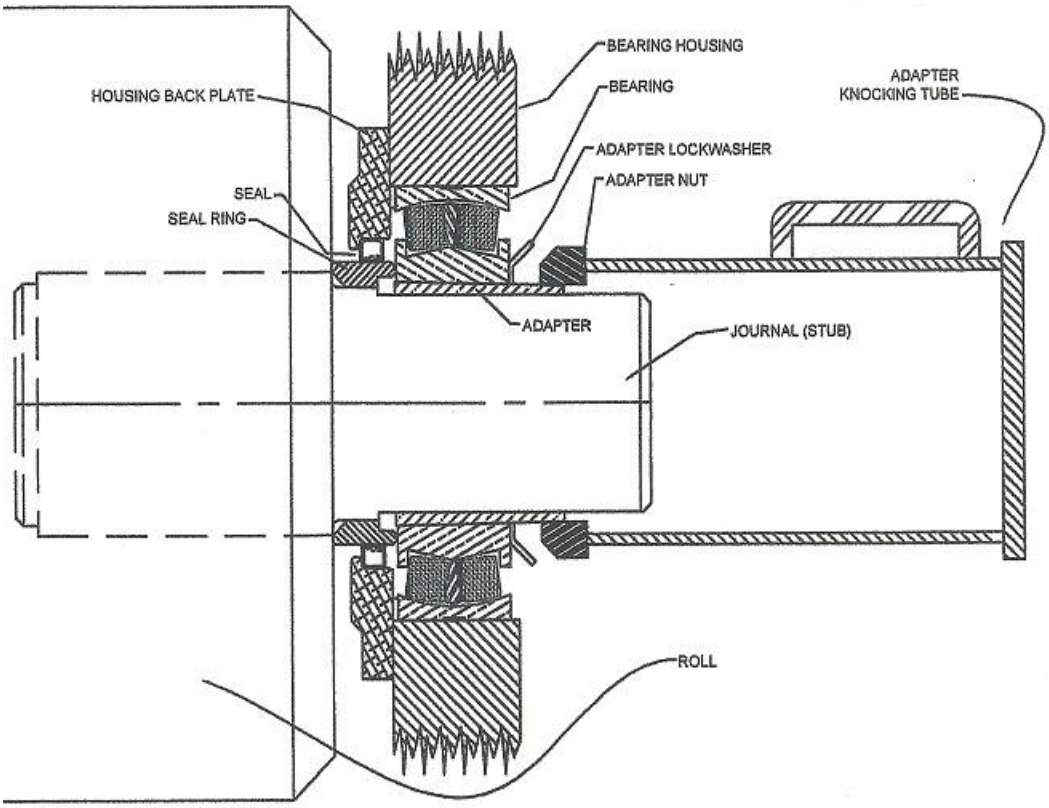

## To Install Bushings

1. Remove all paint, oil, grease, etc. from tapered surface of bushing and bore of mating part.
2. If bushing has a keyway, install shaft key. (Note: If a rectangular key is required, one will be furnished with the bushing.)
3. Select **standard** or **reverse** mounting assembly. See figures 1 and 2.

**Note: If bushing does not slide freely on shaft, wedge a screwdriver blade into the saw cut at the flange OD to open the bore of the bushing. Caution: Excessive wedging will split the bushing.**

4. **Standard Mount** –Slide bushing on shaft, flange first. If using the setscrew, snug it against the key. Excessive Torque will cause mating part to be eccentric. Position mating part in place on bushing aligning drilled holes in mating parts with tapped holes in bushing flange. Using lock washers, install cap screws thru the mating hub into the bushing flange. (Note: M thru S Bushings can only be Standard Mounted. Be sure the two tapped holes in the mating hub do not align near the bushing saw cut. If they do, rotate the bushing 90 degrees.)
5. **Reverse Mount**-Place mating part over and onto shaft as far as possible with large bore end of taper outward. Slide bushing onto shaft so tapered end will engage into the mating part. Tighten setscrew, align drilled holes in bushing flange and into the mating hub.
6. **Use A Torque Wrench**-Tighten all cap screws evenly and progressive in rotation to the torque valve listed in the table. **Excessive wrench torque, closing the gap between the bushing flange and mating hub, or the use of lubricants will break the mating hub.**

## To Remove Bushings

1. Loosen and remove all cap screws.
2. For Standard Mount, thread cap screws into tapped holes in mating part to jack against bushing flange for Reverse Mount, thread cap screws into tapped holes in bushing flange to jack against mating hub. Tighten bolts evenly and progressively in rotation to separate the two components.
3. Loosen setscrew to slide bushing from shaft.

Screw Tightening Information

| Tapered Bushing | Size & Thread of Cap screw | Ft- Lbs. To Apply With Torque Wrench |
|---|---|---|
| QT | 1/4-20 | 9 |
| JA | No. 10-24 | 5 |
| SH,SDS,SD | 1/4-20 | 9 |
| SK | 5/16-18 | 15 |
| SF | 3/8-16 | 30 |
| E | 1/2-13 | 60 |
| F | 9/16-12 | 110 |
| J | 5/8-11 | 135 |
| M | 3/4-10 | 225 |
| N | 7/8-9 | 300 |
| P | 1-8 | 450 |
| W | 1-1/8-7 | 600 |
| S | 1-1/4-7 | 750 |

Standard Mounting

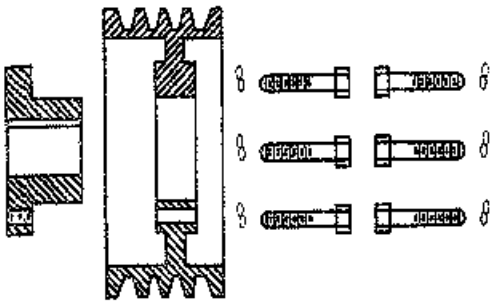

Fig. 1

Reverse Mounting

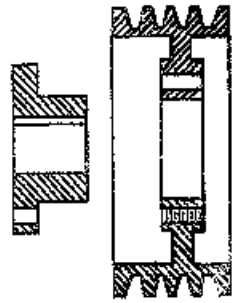

Fig. 2

## To Start Up Your Mill

1. Blow all return steam lines to rid system of water.
2. Fill steam cabinets with grain.
3. Start rolls, airlift and augers.
4. To avoid pulling boilers too low, steam only two cabinets at one time.
5. Turn all steam valves to full open, when top and bottom gauges reach 205 degrees close valves and go to next machine, using same process on all machines.
6. When all cabinets are heated to 205 degrees, start first machine; set SCR 50% of regular use; open steam valves slightly; check to see if feed is getting to rolls; engage rolls.
7. Go to next machine with same process until all are running.
8. Return to first machine, raise SCR speed to 75% and adjust steam.
9. Repeat previous process on all machines, but increasing SCR to desired setting.
10. After all machines are operating at desired speed for one hour check and record flake weight and appearance, also check and record bearing temperature.
11. Use all steam laterals; usually the top valve will run full open, next at ¾ , next at ½ , and bottom cracked slightly. If you get steam out of the top of the cabinet, or too much on bottom, adjust accordingly.
12. Record flake and bearing temperature every two to four hours.

## To Shut Down Your Mill

1. Close gates from grain bin to steam cabinet, leave steam on until grain drops below each lateral.
2. When grain gets below bottom sight glass, watch closely so that grain does not run out with rollers engaged.
3. Roller man needs to monitor peg feeder regularly to see that rolls do not run dry.
4. Always release rolls before turning off feeder.
5. Turn off peg feeder bar and rolls.
6. Make sure peg feeder bar and rolls have completely stopped turning.
7. Shut off power and lock-out electrical box.
8. Clean peg feeder and inside of roll covers

**NEVER LET ROLLS RUN TOGETHER, AS THIS WILL DESTROY**

**CORRUGATION QUICKLY AND CAN CREATE FLAT SPOTS.**

## Set Roll Scrapers

1. The roll scraper is designed to prevent chipping of the rolls and product buildup on the roll, which would cause them to bounce and thus yield an inconsistently milled grain.
2. It is intended this scraper has contact with the roll. A small amount of tension between the roll and scraper is desired.

### To Increase Tension

A. Adjust both sides simultaneously.
B. Turn the scraper adjusting knob #10 clockwise or inward, bringing it close to the roll.

### To Reduce Tension

A. Adjust both sides simultaneously.
B. Turn the scraper adjusting knob #10 counterclockwise or outward, bringing the scraper away from the roll.

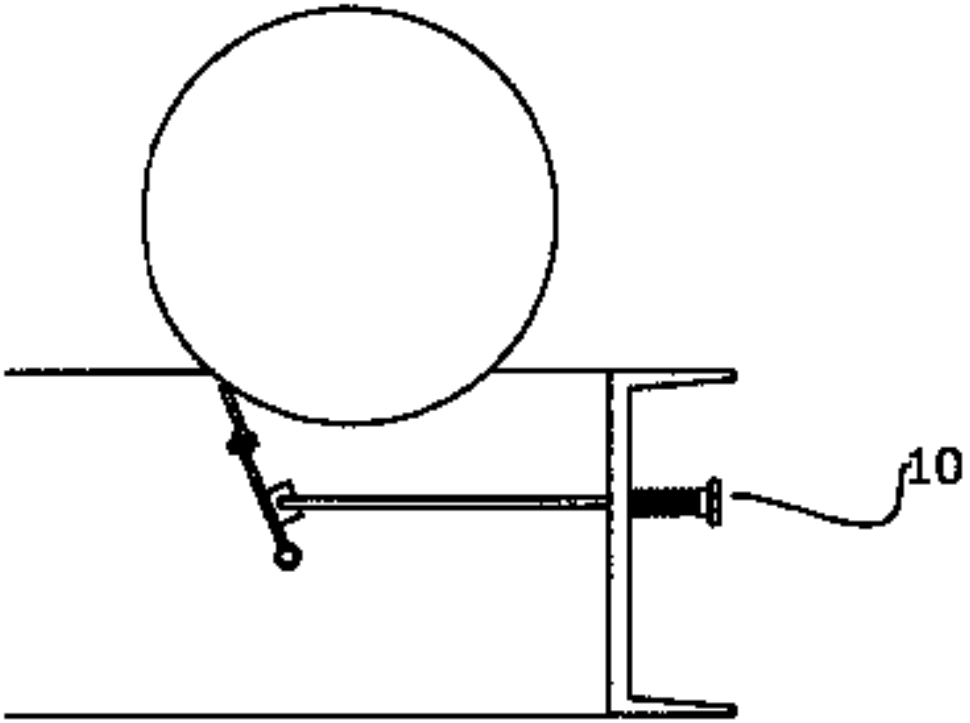

# Maintenance of the Mill

1. Lubrication- Depending on mill conditions, lubrication methods will vary. Contact your grease representative or mill technician for the correct method. Main roll bearings should be greased every day. Old grease will come out past the seals, this is normal for a purging type system. Use caution with sealed bearings as too much grease will burst these seals. Sealed bearings are located on the idler shaft.
2. Hydraulic Pressure - 1000 to 1200 PSI is normal pressure for quality flaking.
3. Check all bolts periodically for tightness.
4. Check bearings for roughness and excessive heat.
5. Check V-Belt for tightness and wear.
6. Check mill for level periodically.
7. Keep saddles adjusted to prevent whole grain from slipping between the face of the roll and the hood of the mill.
8. Rolls should be recorrugated as needed to ensure against low capacity and inconsistent quality. An even wear improves roll life.
9. Keep scraper blades adjusted to assure rolls are being cleaned properly. Slight tension on the rolls is all that is needed.
10. Excessive vibration may be caused by rough or worn bearings. These bearings should be replaced. By continuing use of worn bearings, shaft breakage chances are greatly increase

# “MAN-CYL”
## MANUAL CYLINDER FOR ROLLS
## PATENT # 4.899.943

### Background of the product

(1) Field of the Product

This product relates to roller mills for grain, and more particularly to a roller mill for rolling cooked feed for cattle.

(2) Description of Use

It is common to feed steamed feed to cattle that are being fattened for slaughter. After the feed is steamed, it is rolled.

When grain is not being fed to the roller mill, the rolls are normally separated or disengaged. When the roller mill is rolling the grain, they are in engaged position. The engaged position does not necessarily mean that the rolls are contacting one another. Often, they will be separated by 1/16” or so to properly roll the grain. The exact degree of separation depends not only upon the material that is being rolled, but also upon the individual preference of the operator.

When the rolls are engaged, they are separated by the prescribed amount with rigid adjustable stops. They are held against the stops by heavy springs. The springs normally hold the rolls against the stops for the minimum clearance, except when a foreign object is in the grain. Regardless of all precautions, often a foreign object such as a piece of metal or other hard object will be in the feed. It is desirable for the rolls to spring open on such an occasion.
Also, it is necessary that the two ends of the rolls or the two bearing blocks holding the rolls be moved forward and back in unison.

The rolls or bearing blocks may be moved only about ¼” between the engaged and disengaged positions. Normally, one roll is stationary and the other is moved between the engaged and disengaged position.

Before this product, about 90% of the rolls were moved into position by hydraulic cylinders. These hydraulic cylinders operated a tension shaft that moved axially. The axially movement of each tension shaft compressed its spring. The compressed spring exerted about 1200 pounds of force on the tension shaft.

The distal end of the shaft had a compression spring attached thereto. The distal end and compression spring extended outward from the rolling mill. A housing pad attached to the spring would move the bearing block and thus, the moveable rolls. Since the cylinder operated on hydraulic fluid, it was normally necessary for their operation that the location of the roller mills had available electricity and compressed air for the pressure feed of the hydraulic pumps.

## Summary of the product

Our product is a simple manual system for moving and locking the rolls between the positions of being disengaged to engaged. Within our product, a heavy spring is contained within a tubular spring holder which is basically a cylinder having a square cross section. The spring is a compression spring with one end bearing against a clearance adjusting nut on the spring holder and the other end against a spring nut upon a tension shaft.

The tension shaft is telescoped through the compression spring and through the clearance adjusting nut. The distal end of the tension shaft has a housing pad mounted thereon. The housing pad is moved relative to the tension shaft by an eccentric upon a connecting shaft that extends from one tension shaft to the other. The housing pad engages an arm carrying the moveable roll as in the pneumatic operators as commonly on the market today.

The spring is preloaded by rotating the tension shaft so that threads on the tension shaft through the spring nut compress the spring until there is the desired force to be applied to the rolls. E.G., the spring will be compressed until it exerted about 1,200 pounds against the spring nut. One end of the tension shaft bears against the end of the tubular spring holder in the disengaged or unengaged position.

The clearance between the rolls is set by the clearance adjustment nut that is on the end of the spring holder. Since one end of the spring holder is pivoted to the frame and the clearance adjustable nut butts against the arm carrying the moveable bearing, this adjustment on the minimum clearance is the same as the prior art hydraulic cylinders. However, in the prior art, the adjustment nut is located on the hydraulic cylinder. In this product, the spring holder occupies the same as upon the prior art devices.

When the moveable housing pad is moved against the arm, it is only necessary to take the slack from the tension shaft. I.e. the only movement of the tension shaft is the stretch between the spring nut within the spring holder and the eccentric mechanism that moves the housing pad. As explained above, the spring is preloaded by the rotation of the tension shaft, and it is not necessary to load and unload the tension spring each time the rolls are moved from a disengaged position to an engaged position.

## Set “Man Cyl” Tension

1. Loosen adjusting nut lock. Move adjusting nut and adjusting nut lock inward (towards cylinder as far inwards as possible).
2. Set MAN CYL closure in the engaged position. Tighten tension nut (inward) until snug. Make sure rolls are touching each other.
3. Move adjusting nut outward until against housing ears.
4. Disengage MAN CYL closure. Tighten tension nut (inward) two complete rounds. Engage closure.
5. Move adjusting nut outward one complete round. Engage closure and lock adjusting nut.
6. Disengage closure. Turn on machine (turn adjusting nuts equally on both sides to obtain proper flake

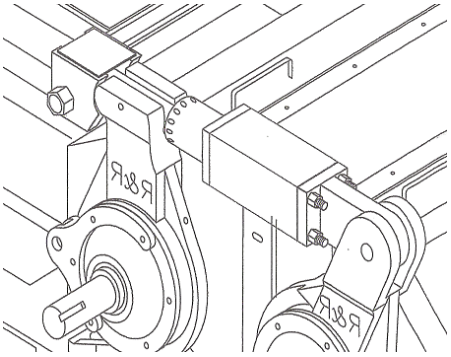

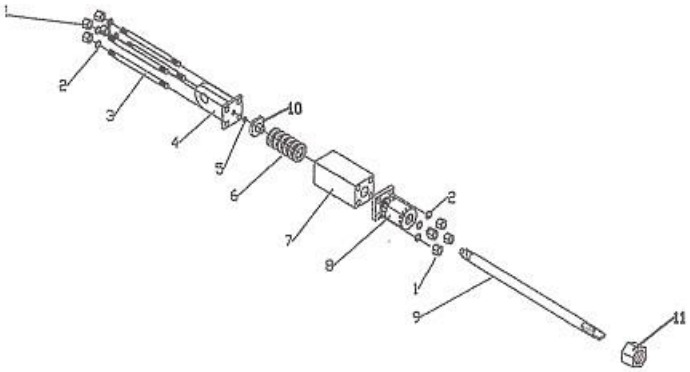


**MAN CYL ASSEMBLY**

| # | PART # | DESCRIPTION |
|---|---|---|
| 1 | N58FT | 5/8 NUT FINE THREAD |
| 2 | WL58 | 5/8 LOCK WASHER |
| 3 | BOL58X1234 | MANCYL TIE BOLTS |
| 4 | MANCYL14 | MANCYL CLEVIS |
| 5 | MANCYL15 | RUBBER WASHER |
| 6 | MANCYLSPG | MANCYL SPRING |
| 7 | MANCYL11 | MAN CYL BARREL |
| 8 | HY18ADNC | ADJUSTING NUT |
| 9 | MANCYL12 | MANCYL TEN. SHAFT |
| 10 | MANCYL13 | SPRING NUT |
| 11 | N114FT | 1-1/4 HEX NUT |
| | MANCYL | COMPLETE MANCYL |

## MANCYL CLOSURE

| # | PART # | DESCRIPTION |
|---|---|---|
| 12 | MANCYL26 | ECC. ENDNUT |
| 13 | MANCYL22 | ECC. HOUSING |
| 14 | MANCYL24 | HOUSING PAD |
| 15 | MANCYL23 | MANCYL ECCENTRIC |
| 16 | KY38X114 | 3/8 X 114 KEYSTOCK |
| 17 | MANCYL21 | CONNECTING SHAFT |
| 18 | MANCYL25 | MANCYL HANDLE |
| 19 | GRSZK | 1/8 GREASE ZERK |
| | MANCLO | COMPLETE CLOSURE |

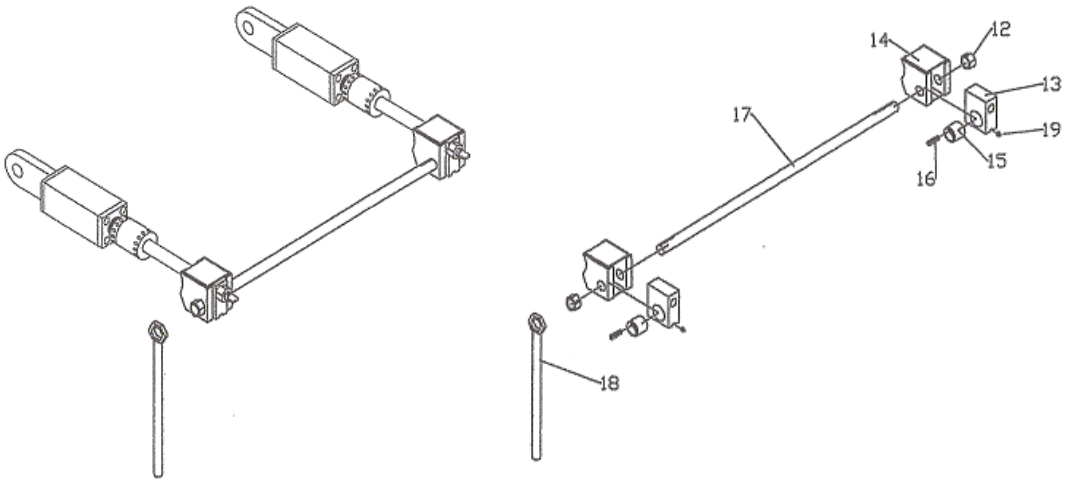

## Hydronic Corporation

### Air Driven Hydraulic Pumps and Intensifiers

# P820 Installation, Use and Maintenance Manual

### Contents



Hydronic Corporation, 32613 Folsom, Farmington Hills, MI 48336, (248) 477 2288, (248) 478 3689

**Hydronic Air Driven Pumps & Intensifiers 820 Installation, Use and Maintenance Booklet 01-01-99**

## Introduction

This handbook is intended to give the operator the basic instructions for the use and maintenance of the pump. The air hydraulic pump operator must read this handbook before putting the pump into operation. After correctly installing the pump, keep this manual stored in a safe place. If you have difficulty in understanding any part of this handbook, contact Hydronic Cor-poration. Regular servicing and correct use of the pump are fundamental in obtaining optimum performance over its life. When contacting our service center, specify the pump model and serial number; this will help us to respond quickly and effectively.

## Guarantee

Hydronic pumps are guaranteed both for the quality of materials used and for overall design. The warranty runs for six months of normal use at eight hours per day and five days per week. The warranty itself does not cover seals or defects arising out of operating with unsuitable fluids or at pressures above the specified maximum. The guarantee cannot cover pumps that may have been tampered with. Defective goods must be sent to Hydronic Corporation at Farmington Hills or to the distributor covering the area, freight pre-paid in either case. Any pump returned to us must be accompanied by a full written description of such faults or defects as have been discovered. Please also ensure that the pump's serial number is attached to the paperwork.

## Identification Plate

### Description of the standard pump components

1 Pump model and multiplication ratio
2 Serial number pump
3 Maximum air pressure
4 Maximum working oil pressure allowed
5 Year of construction

B Air valve
C Air inlet 1/2" NPT
D Air silencer
E Oil outlet #8 SAE
F Oil return #8 SAE
G Oil filler plug
H Oil level sight glass

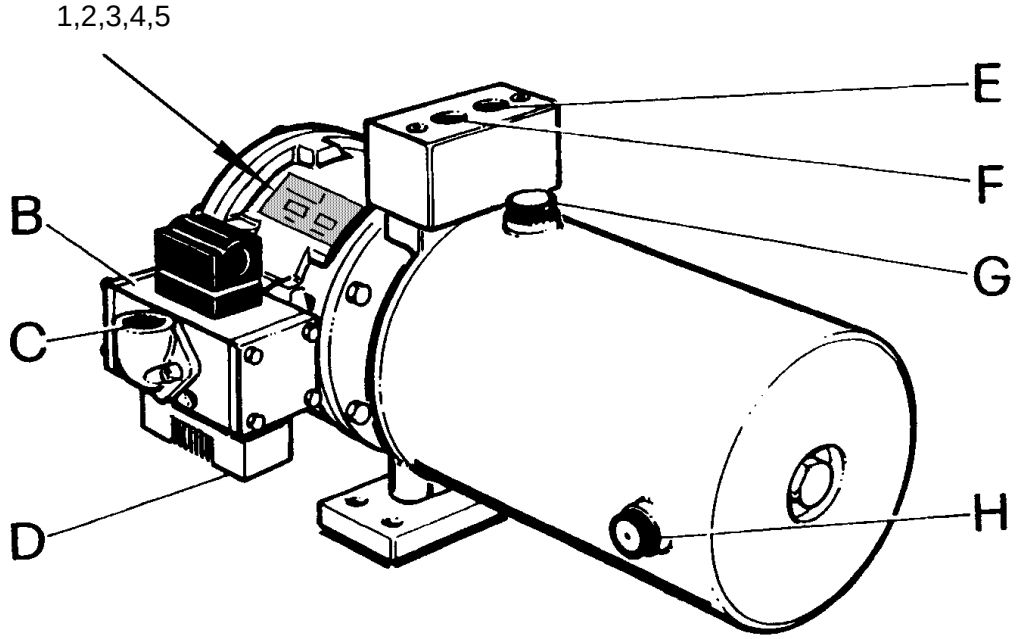

## Installation Guide

Pumps may be installed in a horizontal or vertical position for optimum functioning of suction and delivery valves. The round reservoir may be used horizontally and it is advised that the breather and sight glass be interchanged and/or the reservoir rotated to allow the breather to remain uppermost. The suction and return tubes inside the reservoir may also be rotated to ensure fluid is taken from, and returned to, the bot-tom of the reservoir in any given position. The air inlet connection can be rotated at 90 º and piping of not less than 3/8" bore should be used. 1/2" should be used if the pump is to be run at higher speeds for greater flows.
It is advisable to use or maintain :

- Hydraulic oil having viscosity of 150 to 250 SSU
- Oil temperature 32º F to 150º F
- Air temperature 40º F to 100º F
- Room temperature 40º F to 100º F

Obstructive icing of the silencer may occur under certain temperature/humidity conditions. This can be remedied by the addition of antifreeze oil for pneumatic equipment to a mist lubricator

## Compressed Air System

It will be advisable to fit an air filter/regulator unit having minimum flow capacity of 50 scfm plus a pressure gauge in order to ensure the pump has sufficient air energy to work correctly and provide the hydraulic performance you expect

## Hydraulic System

Valves, pipes, hoses and accessories should all correspond to maximum working pressure of the pump used and be of a size that will fulfill flow requirements

## Application

Hydronic air driven hydraulic pumps are designed for operating oil hydraulic circuits and to cover the wid-est range of requirements to the best advantage.
The pump itself operates quite simply, using a known pressure intensification principle. A piston with a large surface area is actuated by compressed air. Attached to it is a piston with a smaller surface area, which is driven in a hydraulic chamber generating a high level of hydraulic pressure. The continuous pumping ac-tion is produced by the compressed air being switched by a special seal less valve. By regulating the compressed air supply pressure from 30 psi to 100 psi, the maximum hydraulic pressure can be adjusted by the ratio of the pump used. As the hydraulic load of the circuit increases and the oil pressure rises, the pump will slow down and eventually stop. In this way, the maximum load of the circuit will be maintained without air consumption.

## Storage

If the pump is to be kept out of use for a long period, clean the pump in general and drain the oil from the tank. Cover the pump and store it in a dry, well-protected place. It is advisable to wrap the pump in a plastic film. To put back into service, check all parts, fill tank with oil and try the pump out to ensure that it working properly. This operation must be carried out by qualified personnel.

## Disposal

If the pump is to be scrapped, treat as a special type of waste. Dismantle it and divide it into materials of the same type and dispose of them in accordance with the local laws and regulations in your state.

## Starting - Up

Oil pressure can be determined by regulation of the compressed air, bearing in mind of course the multiplication ratio pre-selected for the pump itself.

The models are :

P820 RATIO 1:5
P820 RATIO 1:10
P820 RATIO 1:20
P820 RATIO 1:30
P820 RATIO 1:40

For instance, when supplied with compressed air at 80 psi, the P820-5 will produce oil pressure of 80 x ratio, 400 psi. It should be remembered however, that real efficiency produced by the pump is slightly less than given by the above theoretical calculation. This difference will not be noticed by a hydraulic gauge.

Having connected the compressed air supply at a low pressure, allow the pump to operate slowly until primed and oil comes through to the output port. Now shut off the air supply to the pump and securely connect the hydraulic circuit. Switch on the air supply again and allow the pump to run in order to bleed any air out of the hydraulic circuit.

Pump components:

- Standard block with oil output and return line.
- Modular block for optional mounting D03 valve. Other accessories are available.
- Minimum internal diameter of air supply line is 3/8”.
- Optional rotation of the air inlet C in four positions.
- Maximum oil pressure can be preset by regulating the air supply at point C between 30 psi and 100 psi.
- The air exhaust and silencer are mounted to one side at point D.
- The oil outlet is positioned to one side at point E and the return at point F.
- The pump itself works automatically and operates by way of a special valve.
- The hydraulic section comprises a pump casing, piston and dynamic rod-seal assembly.
- The suction side of the pump is equipped with spring-loaded check valve. A spring-loaded outlet ball type check valve is incorporated in the hydraulic piston.

## Fault Finding Chart

| Fault | Cause | Remedy |
|---|---|---|
| 1] Pump does not cycle or runs slowly | 1.1] Low pressure in compressed air line.<br>1.2] Formation of ice on the exhaust side.<br>1.3] Accumulation of waste in the silencer.<br>1.4] Blocked element in air filter/regulator | 1.1] Clear any blockage or restriction on the air line.<br>1.2] Shut off pump for a short time and drain off water from the filter<br>1.3] Remove silencer, clean and replace<br>1.4] Close down air supply, dismantle and clean filter. |
| 2] Pump loses air from silencer when stalled | 2.1] Worn valve or seal | 2.1] Replace seal or valve |
| 3] Excess oil leakage from air silencer | 3.1] Worn hydraulic seal | 3.1] Replace seal |
| 4] Pump cycles without pumping oil | 4.1] Blocked oil intake<br>4.2] Bad connection on suction line | 4.1] Clean out filter<br>4.2] Check for bad connections or air leaks on suction line |
| 5] Pump functions but only generates low pressure and does not stall at maximum pressure | 5.1] Internal leakage<br>5.2] Suction valve seats damaged and leaking<br>5.3] Output valve seats damaged and leaking<br>5.4] Worn oil seal | 5.1] Find heat source and change valve<br>5.2] Replace suction valve parts<br>5.3] Replace output valve parts<br>5.4] Replace seal |

## Maintenance

Periodically release the condensation from the air filter. Replace the hydraulic oil every 1500 hours or whenever the oil is polluted.

**Warning**: Remember that repair work can only be made when pneumatic and hydraulic pressure has been released and you are sure that no pressure remains in the circuit.

## Delivery of the pump

### Transport

All the material shipped, including the detached parts, has been thoroughly checked before being consigned to the forwarding agent. The pump is shipped in double corrugated card-board packaging, which assures protection of the product.

### Unpacking

On receipt of the product, open the packaging and remove the pump. Take care not to dam-age any part of the pump. Make an initial check on the pump for damage in transit. In case of damage or if in doubt, do not use the pump and contact Hydronic Corporation or your distributor. The packaging [plastic bags, expanded polystyrene, nails, screws, wood, etc.] must not be left within reach of children since they are potential source of danger. Be sure to dispose of pollutant or non biodegradable materials in the correct way. Materials must be disposed of in accordance with the laws in force.

### Gross weight

P820 standard reservoir 33 lbs.
P828 Large reservoir 44 lbs.

### Contents of the package

The packaging will always contain the following:
1 x air driven hydraulic pump
1 x installation, use and maintenance manual

**Original spare parts**

Parts orders must always be accompanied by the following information:

A] The pump model B] The pump serial number C] The pump year of construction
(all this data is given on the nameplate)
D] The part numbers E] The quantity required F] The name of the part
(All this data is given in the parts list)

A clear and correct statement of this data will allow our after-sales service to respond quickly and appropriately. Every spare part must be replaced by professionally qualified staff. The manufacturer declines all responsibility for malfunctions or accidents deriving from any failure of the product when unqualified persons have made any attempt at repair.

## Wall Mounted Version

| Number | Description | Code # | Quantity |
|---|---|---|---|
| 10 | Screw | 3.94.010 | 2 |
| 11 | Distributor body | 5.65.004 | 1 |
| 12 | O-ring | 3.51.109 | 2 |
| 13 | Screw+washer | 3.94.207 | 6 |
| 14 | Cylinder head | 5.86.006 | 1 |
| 15 | O-ring | 3.51.075 | 2 |
| 16 | Slip ring | 3.51.076 | 2 |
| | O-ring | 3.51.077 | 2 |
| 17 | Locknut | 3.45.204 | 1 |
| 18 | Piston | 5.68.045 | 1 |
| 19 | Cylinder barrel | 5.18.030 | 1 |
| 20 | Plug | 5.84.002 | 2 |
| 21 | O-ring | 3.51.083 | 2 |
| 23 | O-ring+Slip Ring (ratio) | | |
| | 1:5 | 3.51.089+3.51.088 | 2 |
| | 1:10 | 3.51.086+3.51.087 | 2 |
| | 1:20 | 3.51.085+3.51.014 | 2 |
| | 1:30 | 5.50.019+3.51.057 | 2 |
| | 1:40 | 3.51.011+3.51.010 | 2 |
| 25 | Pump Body (ratio) | | |
| | 1:5 | 5.28.030 | 1 |
| | 1:10 | 5.28.029 | 1 |
| | 1:20 | 5.28.028 | 1 |
| | 1:30 | 5.28.057 | 1 |
| | 1:40 | 5.28.027 | 1 |
| 26 | Screw+Washer | 3.94.208+3.72.104 | 6 |
| 27 | Screw | 3.94.013 | 2 |
| 28 | Clamping Plate | 5.65.003 | 1 |
| 29 | Piston (ratio) | | |
| | 1:5 | 5.68.049 | 1 |
| | 1:10 | 5.68.048 | 1 |
| | 1:20 | 5.68.047 | 1 |
| | 1:30 | 5.68.177 | 1 |
| | 1:40 | 5.68.046 | 1 |

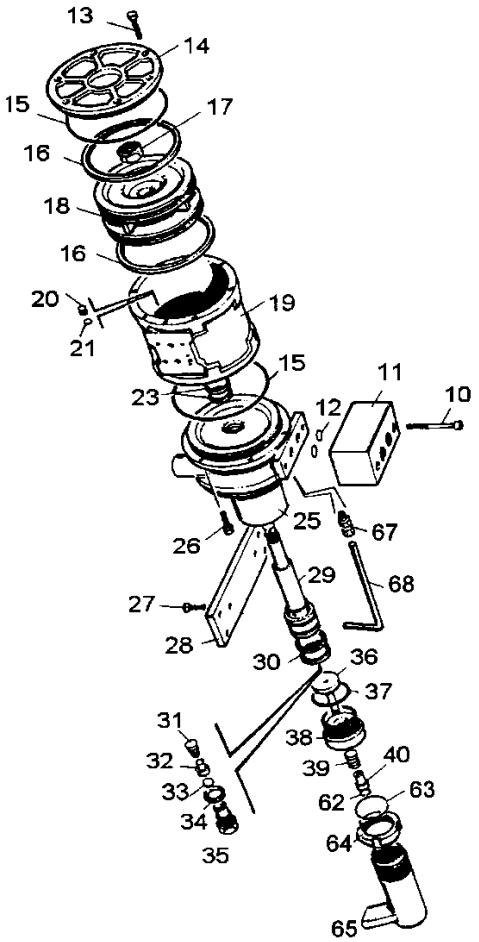

| Number | Description | Code # | Quantity |
|---|---|---|---|
| 30 | O-ring+Slip Ring (ratio) | | |
| | 1:5 | 3.51.096+3.51.097 | 2 |
| | 1:10 | 3.51.094+3.51.095 | 2 |
| | 1:20 | 3.51.092+3.51.093 | 2 |
| | 1:30 | 3.51.173+3.51.033 | 2 |
| | 1:40 | 3.51.091+3.51.090 | 2 |
| 31 | Spring (ratio) | | |
| | 1:5+1:10 | 5.46.028 | 1 |
| | 1:20+1:30+1:40 | 5.46.029 | 1 |
| 32 | Center (ratio) | | |
| | 1:5+1:10 | 5.46.007 | 1 |
| | 1:20+1:30+1:40 | 5.46.006 | 1 |
| 33 | Ball (ratio) | | |
| | 1:5+1:10 | 3.76.006 | 1 |
| | 1:20+1:30+1:40 | 3.76.002 | 1 |
| 34 | Washer (ratio) | | |
| | 1:5+1:10 | 3.52.010 | 1 |
| | 1:20+1:30+1:40 | 3.52.003 | 1 |
| 35 | Valve Connector (ratio) | | |
| | 1:5+1:10 | 5.94.303 | 1 |
| | 1:20+1:30+1:40 | 5.94.302 | 1 |
| 36 | Valve Rod | 5.66.011 | 1 |
| 37 | O-ring (ratio) | | |
| | 1:5+1:10 | 3.51.127 | 1 |
| | 1:20+1:30+1:40 | 3.51.055 | 1 |
| 38 | Valve Body (ratio) | | |
| | 1:5+1:10 | 5.28.032 | 1 |
| | 1:20+1:30+1:40 | 5.28.031 | 1 |
| 39 | Spring | 5.64.030 | 1 |
| 40 | Guide | 5.13.008 | 1 |
| 62 | Collets | 3.06.006 | 2 |
| 63 | O-ring | 3.51.079 | 1 |
| 64 | Lock Nut | 3.45.212 | 1 |
| 65 | Suction Tube | 6.90.003 | 1 |
| 65/1 | Suction Strainer | 3.41.002 | 1 |
| 65/2 | Bush | 5.08.014 | 1 |
| 65/3 | O-ring | 3.51.084 | 1 |
| 66 | Pipe | 5.90.004 | 1 |
| 67 | Connector | 3.70.006 | 1 |
| 41 | Screw | 3.94.206 | 8 |
| 42 | Washer | 3.72.102 | 8 |
| 43 | Cover | 5.27.001 | 2 |
| 44 | O-ring | 3.51.080 | 2 |
| 45 | Plate | 5.08.013 | 2 |
| 46 | O-ring | 3.51.081 | 6 |
| 47 | Floating spool | 5.66.012 | 1 |
| 48 | Sleeve | 5.14.016 | 1 |
| 49 | Screw | 3.94.205 | 2 |
| 50 | Pilot valve | 4.91.002 | 1 |
| 51 | Valve body | 5.28.026 | 1 |
| 52 | O-ring | 3.51.082 | 2 |
| 53 | O-ring | 3.51.002 | 2 |
| 54 | O-ring | 3.51.025 | 1 |
| 55 | Connector | 3.70.005 | 1 |
| 56 | Screw | 3.94.008 | 2 |
| 57 | Screw | 3.94.018 | 3 |
| 58 | Silencer | 3.70.004 | 2 |
| 59 | Block | 5.65.014 | 1 |
| 60 | Washer | 3.72.102 | 2 |
| 61 | Screw | 3.94.205 | 2 |

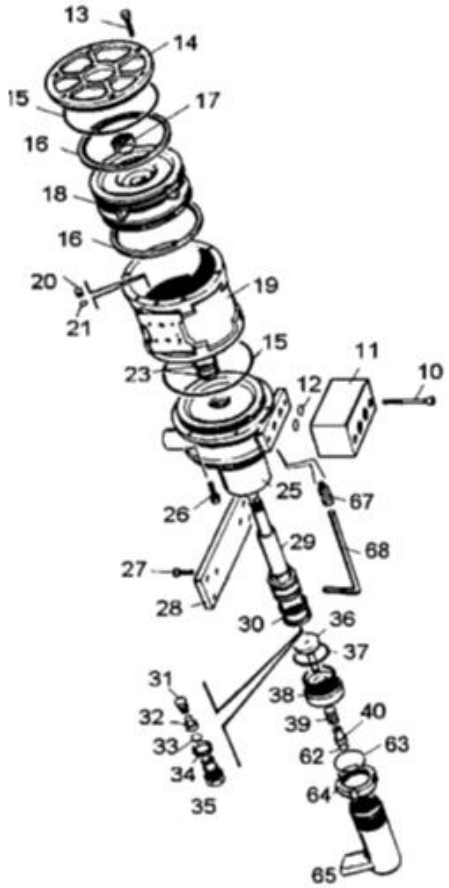


**Pilot Valve**

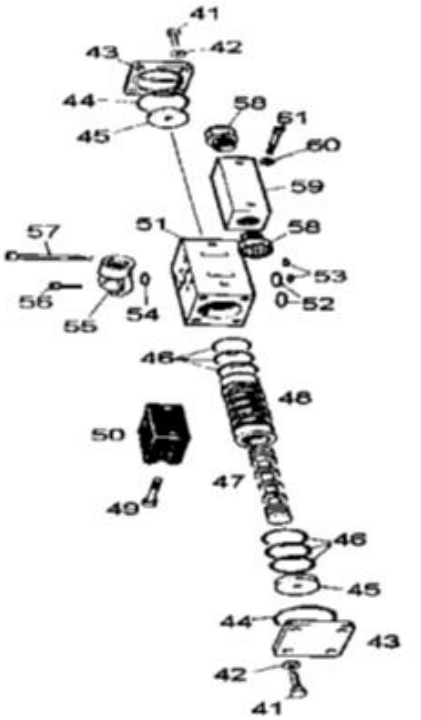

## Tank Mounted Version

| Number | Description | Code # | Quantity |
|---|---|---|---|
| 10 | Screw | 3.94.010 | 2 |
| 11 | Distributor body | 5.65.004 | 1 |
| 12 | O-ring | 3.51.109 | 2 |
| 13 | Screw+washer | 3.94.207 | 6 |
| 14 | Cylinder head | 5.86.006 | 1 |
| 15 | O-ring | 3.51.075 | 2 |
| 16 | Slip ring | 3.51.076 | 2 |
| | O-ring | 3.51.077 | 2 |
| 17 | Locknut | 3.45.204 | 1 |
| 18 | Piston | 5.68.045 | 1 |
| 19 | Cylinder barrel | 5.18.030 | 1 |
| 20 | Plug | 5.84.002 | 2 |
| 21 | O-ring | 3.51.083 | 2 |
| 23 | O-ring+Slip Ring (ratio) | | |
| | 1:5 | 3.51.089+3.51.088 | 2 |
| | 1:10 | 3.51.086+3.51.087 | 2 |
| | 1:20 | 3.51.085+3.51.014 | 2 |
| | 1:30 | 5.50.019+3.51.057 | 2 |
| | 1:40 | 3.51.011+3.51.010 | 2 |
| 25 | Pump Body (ratio) | | |
| | 1:5 | 5.28.030 | 1 |
| | 1:10 | 5.28.029 | 1 |
| | 1:20 | 5.28.028 | 1 |
| | 1:30 | 5.28.057 | 1 |
| | 1:40 | 5.28.027 | 1 |
| 26 | Screw+Washer | 3.94.208+3.72.104 | 6 |
| 27 | Screw | 3.94.013 | 2 |
| 28 | Clamping Plate | 5.65.003 | 1 |
| 29 | Piston (ratio) | | |
| | 1:5 | 5.68.049 | 1 |
| | 1:10 | 5.68.048 | 1 |
| | 1:20 | 5.68.047 | 1 |
| | 1:30 | 5.68.177 | 1 |
| | 1:40 | 5.68.046 | 1 |
| 30 | O-ring+Slip Ring (ratio) | | |
| | 1:5 | 3.51.096+3.51.097 | 2 |
| | 1:10 | 3.51.094+3.51.095 | 2 |
| | 1:20 | 3.51.092+3.51.093 | 2 |
| | 1:30 | 3.51.173+3.51.033 | 2 |
| | 1:40 | 3.51.091+3.51.090 | 2 |
| 31 | Spring (ratio) | | |
| | 1:5+1:10 | 5.46.028 | 1 |
| | 1:20+1:30+1:40 | 5.46.029 | 1 |
| 32 | Center (ratio) | | |
| | 1:5+1:10 | 5.46.007 | 1 |
| | 1:20+1:30+1:40 | 5.46.006 | 1 |
| 33 | Ball (ratio) | | |
| | 1:5+1:10 | 3.76.006 | 1 |
| | 1:20+1:30+1:40 | 3.76.002 | 1 |
| 34 | Washer (ratio) | | |
| | 1:5+1:10 | 3.52.010 | 1 |
| | 1:20+1:30+1:40 | 3.52.003 | 1 |
| 35 | Valve Connector (ratio) | | |
| | 1:5+1:10 | 5.94.303 | 1 |
| | 1:20+1:30+1:40 | 5.94.302 | 1 |
| 36 | Valve rod | 5.66.011 | 1 |
| 37 | O-ring(ratio) | | |
| | 1:5+1:10 | 3.51.127 | 1 |
| | 1:20+1:30+1:40 | 3.51.055 | 1 |

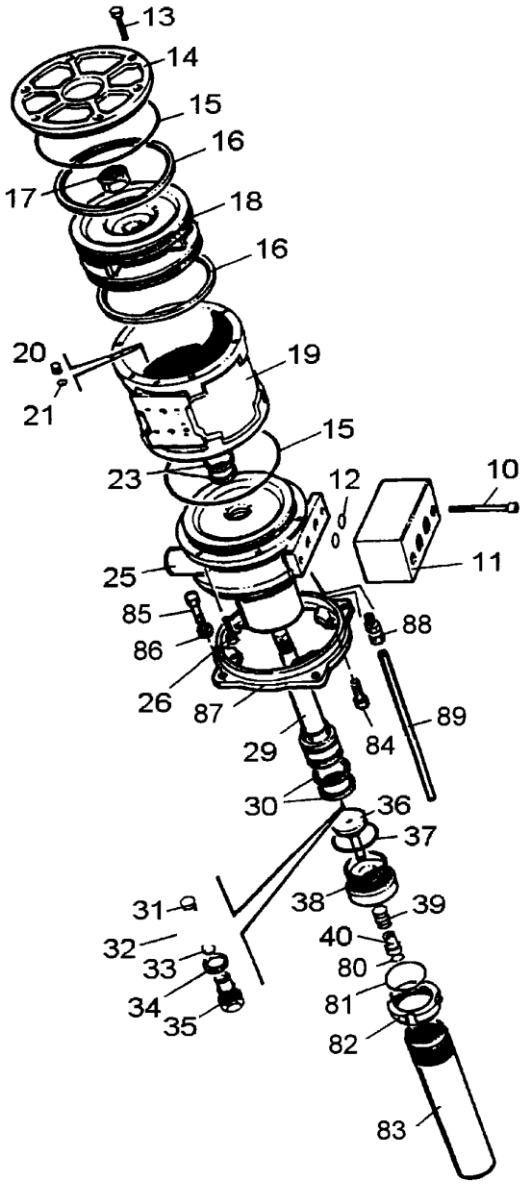

## Tank Mounted Version

| Number | Description | Code # | Quantity |
|---|---|---|---|
| 38 | Valve body(ratio) | | |
| | 1:5+1:10 | 2.28.032 | 1 |
| | 1:20+1:30+1:40 | 5.28.031 | 1 |
| 39 | Spring | 5.64.030 | 1 |
| 40 | Guide | 5.13.008 | 1 |
| 71 | Reservoir Lid | 5.055.0150 | 1 |
| 72 | Filler/breather | OQ10003A | 1 |
| 73 | Discontinued | | |
| 74 | Screw (and washer) | 3.094.0203 | 4 |
| 75 | Washer | 3.072.0103 | 4 |
| 76 | Gasket | 5.050.0006 | 1 |
| 77 | Reservoir | 3.074.0009 | 1 |
| 78 | Plug (and washer) | 3.069.0203 | 1 |
| 79 | Sight level glass | OQ10004A | 1 |
| 80 | Collet | 3.06.006 | 2 |
| 81 | O-ring | 3.51.079 | 1 |
| 82 | Locknut | 3.45.212 | 1 |
| 83 | Suction tube | 6.90.003 | 1 |
| 83/1 | Filter | 3.41.0021 | 1 |
| 83/2 | Bush | 5.08.014 | 1 |
| 83/3 | O-ring | 3.51.084 | 1 |
| 83/5 | Self-locking nut | 3.31.053 | 1 |
| 84 | Screw | 3.94.008 | 4 |
| 85 | Screw+47 | 3.94.023 | 4 |
| 86 | Washer | 3.72.104 | 4 |
| 87 | Flange | 5.42.002 | 1 |
| 88 | Tube | 5.90.017 | 1 |
| 89 | Connector | 3.70.006 | 1 |

## Seal Kits

| Ratio | Code # |
|---|---|
| 1:5 | 3.54.028 |
| 1:10 | 3.54.029 |
| 1:20 | 3.54.030 |
| 1:30 | 3.54.080 |
| 1:40 | 3.54.034 |

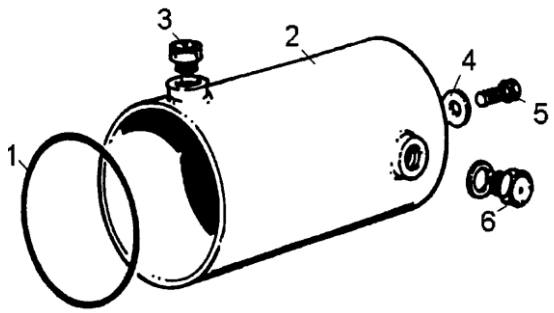


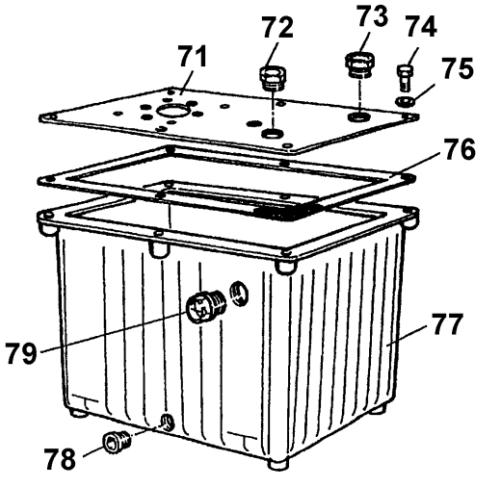

# PARTS GUIDE – 18 X 30 Flaking Machine

## Cover Assembly

## 18 INCH

| # | PART # | DESCRIPTION |
|---|---|---|
| 1 | COV0S1830D | 18” ROLL COVER |
| 2 | MTRSL18A | MOTOR MOUNT (HTD) |
| 2* | MTRSL18D | MOTOR MOUNT (C-BELTS) |
| 2A | MTRSLO | SLIDING MOTOR MOUNT |
| 3 | R1830DD | 18” X 30 DUAL DRIVE ROLL |
| 4 | HSGR18A | HOUSING ASSY COMPLETE |
| 6 | DOR0018 | INSPECTION DOOR |
| 7 | SAD18 | 18” ROLL SADDLES |
| 8 | FR1830CSB | 18” BOLT ON CENTER SECTION |

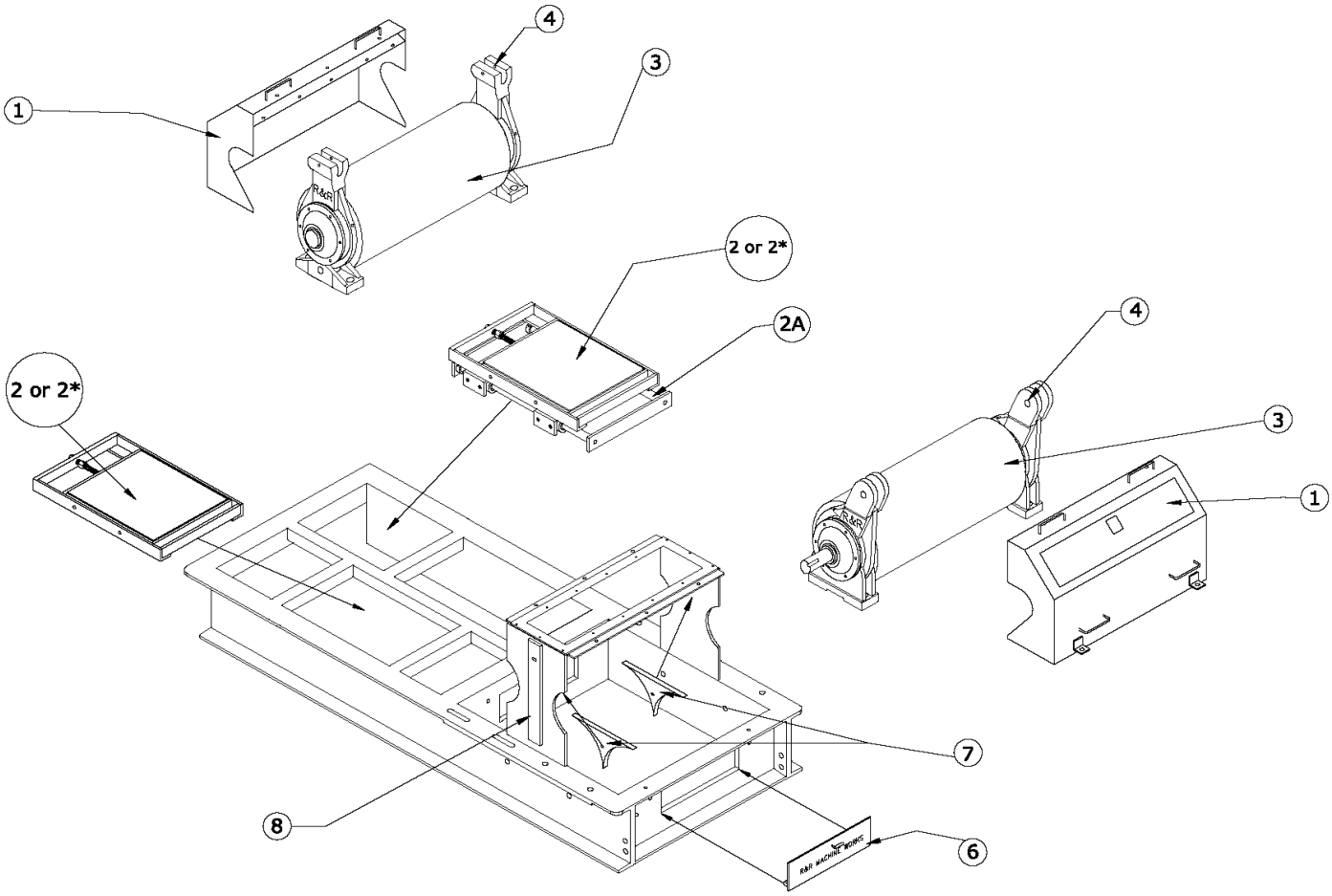

## Scraper Assembly Complete

| # | PART # | DESCRIPTION |
|---|---|---|
| 4 | BOLSS38X1 | SS BOLT 3/8 X 1 |
| 4A | WL38SS | SS 3/8 LOCK WASHER |
| 4B | N38SS | 3/8 SS NUT |
| 9 | SCR1806B | SCRAPER BRACKET |
| 9A | SCR18 | ALUMINUM SCRAPER BLADE |
| 10 | SCR1830SS | SCRAPER SUPPORT ROD |
| 11 | SCR1802SS | SCRAPER TENSION ROD COMPLETE |
| 12 | WF12 | FLAT WASHER |
| 13 | SCR1804 | TENSION SPRING |
| 14 | SCR1803 | STAR KNOB |
| 30 | KYP4 | 1/4 X 4 COTTER KEY |
| 31 | KYP3S | 3/16 S/S COTTER KEY |
| | SCR1830SSB | COMPLETE S/S SCRAPER ASSY. & M/S BRACKETS |

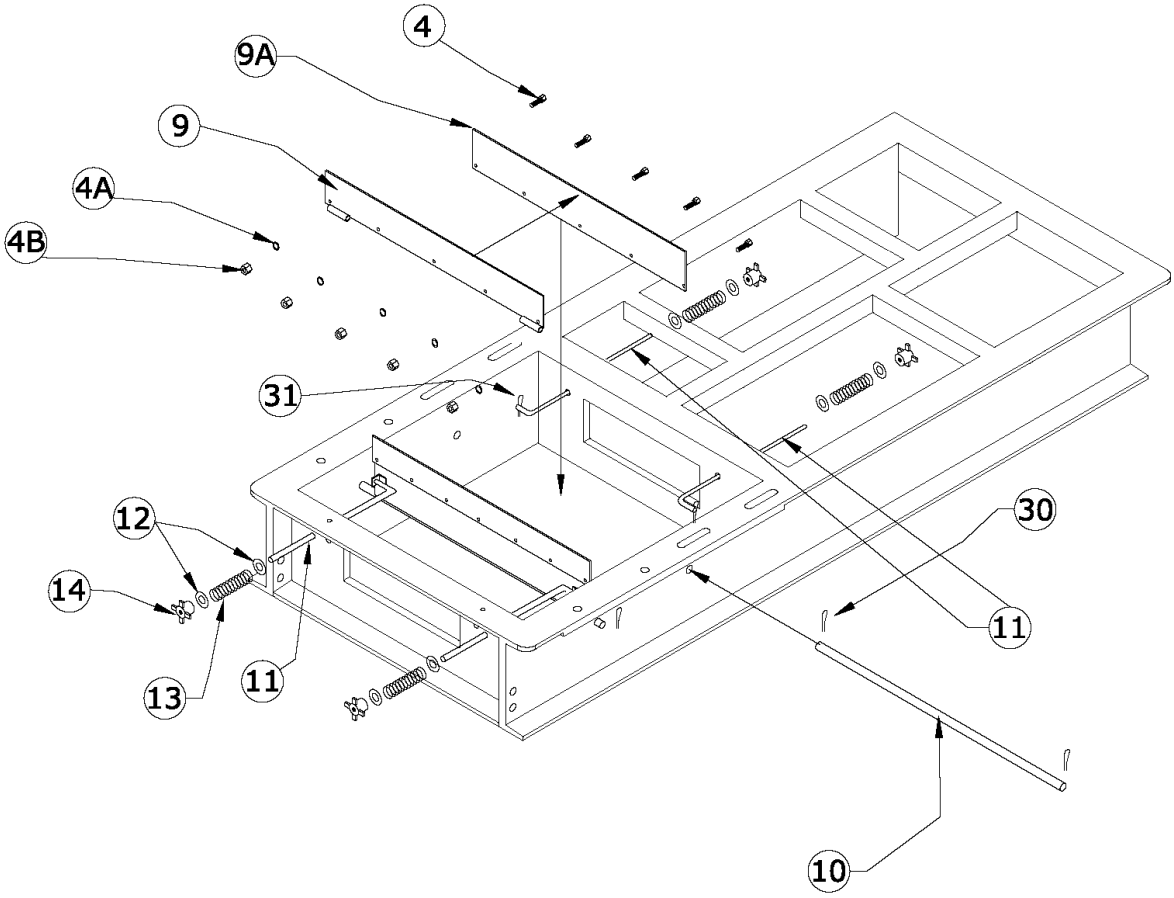

## Peg Feeder Cabinet

| # | PART # | DESCRIPTION | | # | PART # | DESCRIPTION |
|---|---|---|---|---|---|---|
| 1 | PFCAB1830S | FEEDER CABINET | | 14 | WL12SSIT | ½” S/S INTERNAL TOOTH LOCK |
| 2 | PFSG18-30 | SHUT OFF GATE | | 17 | PFDR18-30 | FEEDER CABINET DOOR |
| 3 | PFKNB | 1/2” TENSION KNOB | | 18 | DORSD18L | S/S LARGE WELD ON HINGE |
| 4 | PFGBEB | GEAR BOX BRACKET | | 19 | PFDRH | DOOR HANDLE |
| 5 | HYU171611516 | 1 7/16” X 1 15/16” U CUP | | 20 | DOR0018S | STAINLESS STEEL SPRING |
| 6 | PFGBE031 | ALUMIN. ROD GLAND & | | 21 | PFBAR1830 | PEG FEEDER BAR |
| 8 | BRG1716UIA | UHMW BEARING W/ INSERT | | 22 | PFPAN34-30 | FEEDER TROUGH |
| 9 | WF12SS | ½” S/S FLAT WASHER | | 23 | PFFG18-30 | FINGER GUARD |
| 10 | BOLSS12X1 | ½” X 1” S/S BOLT | | 24 | PFFH | ½” S/S COUPLING NUT |
| 11 | WL12SS | ½” LOCK WASHER | | 25 | BOLSS12X112 | ½” X 1 ½” S/S BOLT |
| 12 | PFFGT-30 | DIRECTIONAL GATE | | | | |

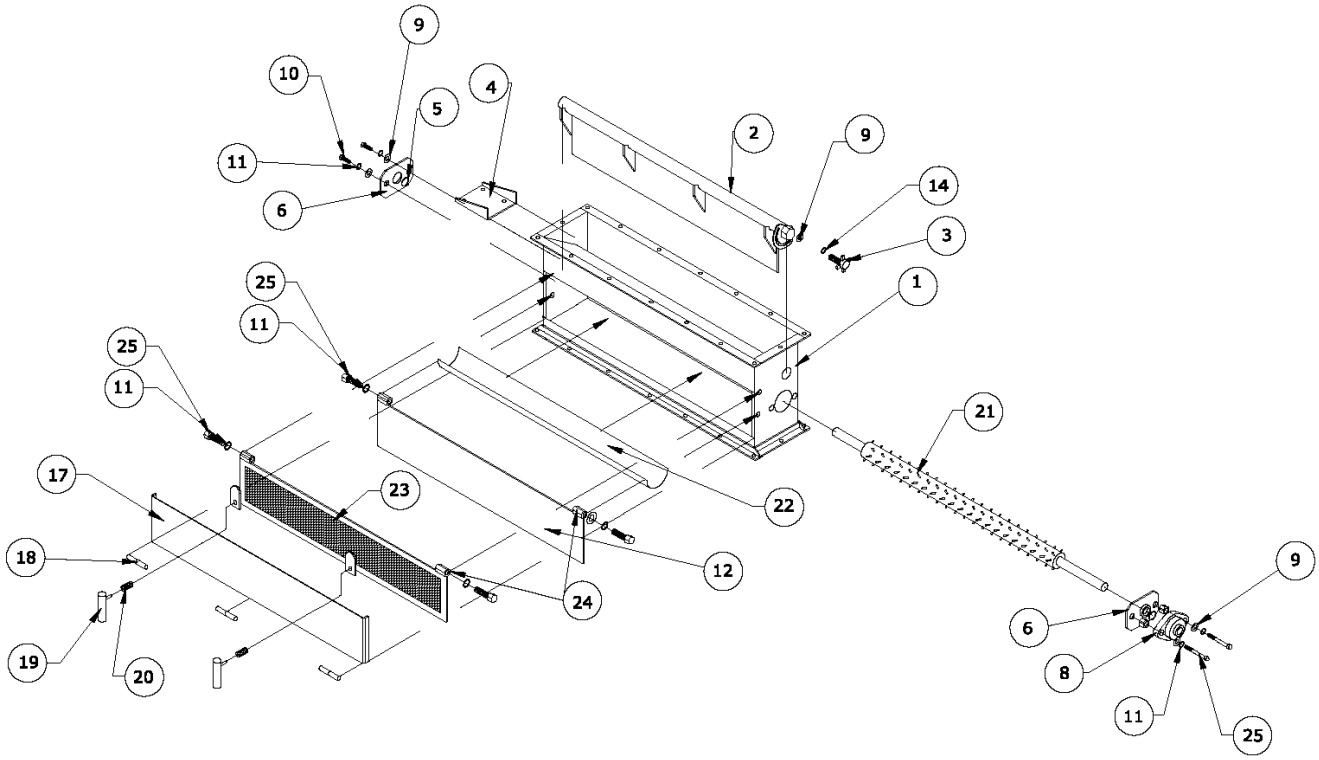

## Roll / Bearing Assembly

| # | PART # | DESCRIPTION |
|---|---|---|
| 3 | R1830DD | 18” X 36” DUAL DRIVE ROLL |
| 15 | BOL38X112 | 3/8” X 1 ½” BOLT |
| 16 | SL417539 | CAP SEAL |
| 17 | HSGR14I | BEARING HOUSING CAP |
| 18 | HS18S | BEARING SPACER |
| 19 | NAN28 | ADAPTER NUT |
| 20 | W28 | ADAPTER LOCK WASHER |
| 21 | BRG2228K | 22228K BEARING |
| 22 | HSGR10 | STATIONARY ROLL BRG. HOUSING |
| 23 | HSGR13 | BEARING HOUSING BACKPLATE |
| 24 | BOL38X1 | 3/8” X 1” BOLTS |
| 22, 23, 24 | HSGR10C | STATIONARY BRG. HOUSING W/ BACKPLATE |
| 25 | SL415294 | BACK PLATE SEALS |
| 26 | ADS28 | ADAPTER |
| 27 | DS1114HT | HI-TEMP DUST SHIELD |
| 28 | JRSR18 | SEAL RING |
| 29 | HSGR11 | SWIVEL ROLL BRG. HOUSING |

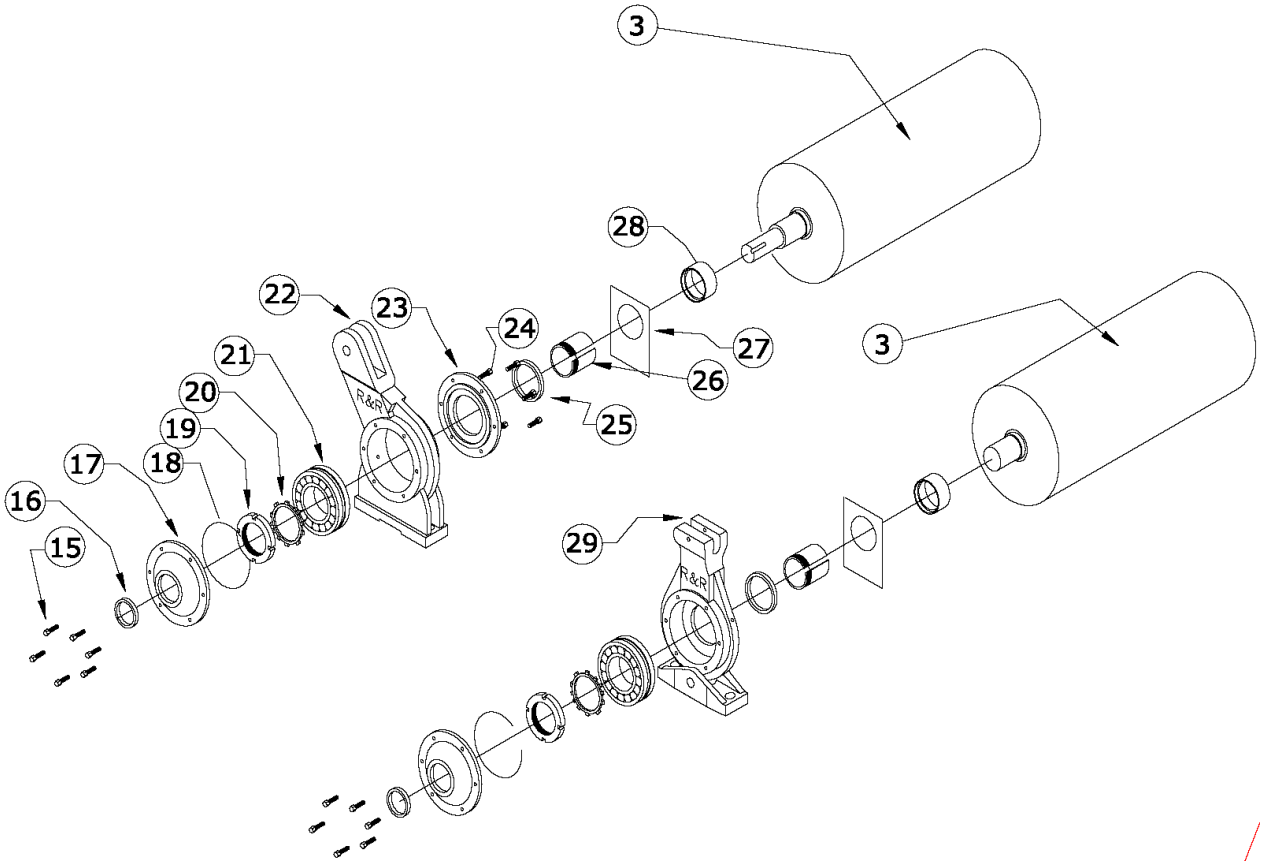

## Belt / Sheave Assembly
## 1200 RPM HTD

| # | PART # | DESCRIPTION |
|---|---|---|
| 1 | KY7858 | 7/8” X 5/8” KEY STOCK |
| 2 | GAR20DC | 18”/20” DUAL DRIVE GUARD |
| 3 | BOL38X3/4 | 3/8” X 3/4” BOLT |
| 4 | SHP168 | P168-14-55 F SHEAVE |
| 5 | N12CTNL | ½” NYLOCK NUT |
| 6 | WF12 | ½” FLAT WASHER |
| 7 | GARSPR80 | VIBRATION SPRING |
| 8 | BOL12X312 | ½” X 3 ½” BOLT |
| 9 | HBF312 | F 3-1/2 DRIVE HUB |
| 10 | BLT45785A | 4578-14M55 BELT |
| 11 | HBE238 | E HUB 2-3/8” (40 HP) |
| 12 | SHP48 | P48-14M-55E SHEAVE |
| 13 | BOLHE | E HUB BOLTS |
| 14 | BOLHF | F HUB BOLTS |

**NOTE:** SPECIFY LEFT OR RIGHT GUARD SIDE WHEN ORDERING.

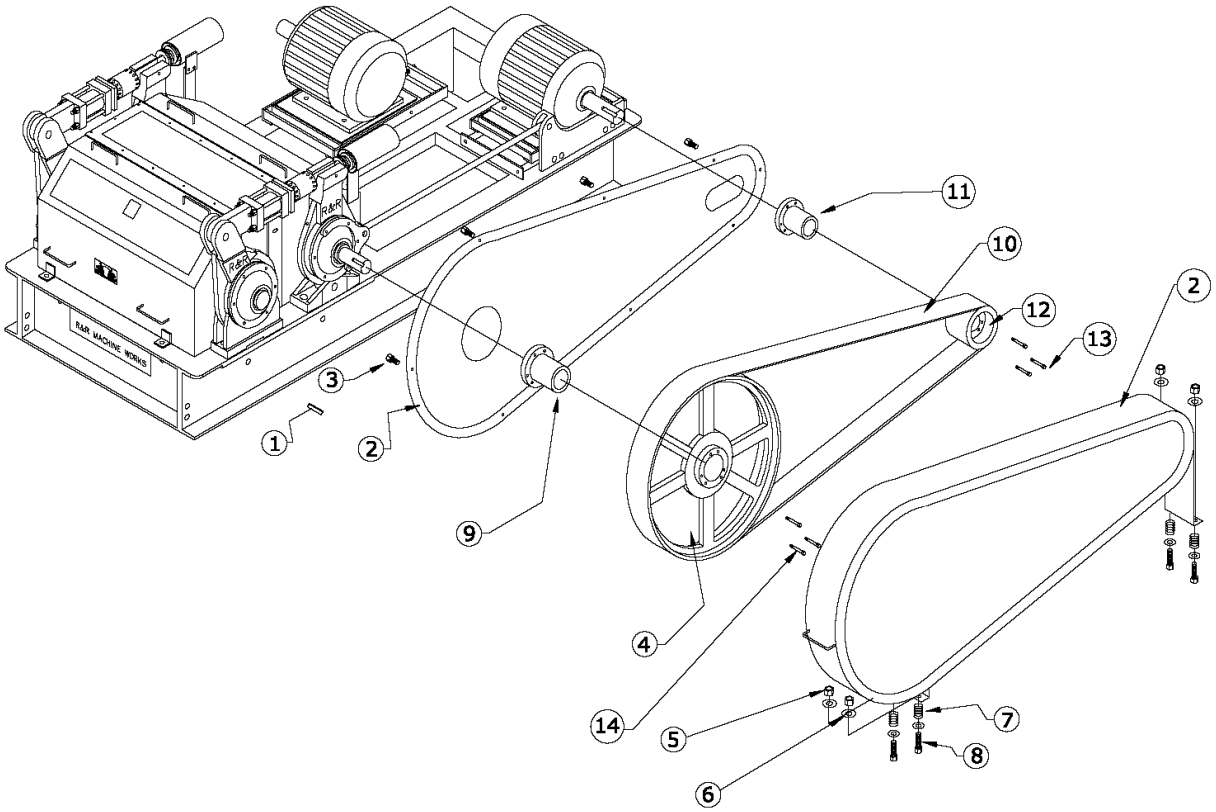

## Belt / Sheave Assembly
## 1440 RPM HTD

| # | PART # | DESCRIPTION |
|---|---|---|
| 1 | KY7858 | 7/8” X 5/8” KEY STOCK |
| 2 | GAR20DC | 18”/20” DUAL DRIVE GUARD |
| 3 | BOL38X3/4 | 3/8” X 3/4” BOLT |
| 4 | SHP168 | P168-14-55 F SHEAVE |
| 5 | N12CTNL | ½” NYLOCK NUT |
| 6 | WF12 | ½” FLAT WASHER |
| 7 | GARSPR80 | VIBRATION SPRING |
| 8 | BOL12X312 | ½” X 3 ½” BOLT |
| 9 | HBF312 | F 3-1/2 DRIVE HUB |
| 10 | BLT45785A | 4578-14M55 BELT |
| 11 | HBSF55 | SF 55 MM HUB |
| 12 | SHP40SF55 | P40-14M-55 SF SHEAVE |
| 13 | BOLHSF | SF HUB BOLTS |
| 14 | BOLHF | F HUB BOLTS |

**NOTE:** SPECIFY LEFT OR RIGHT GUARD SIDE WHEN ORDERING.

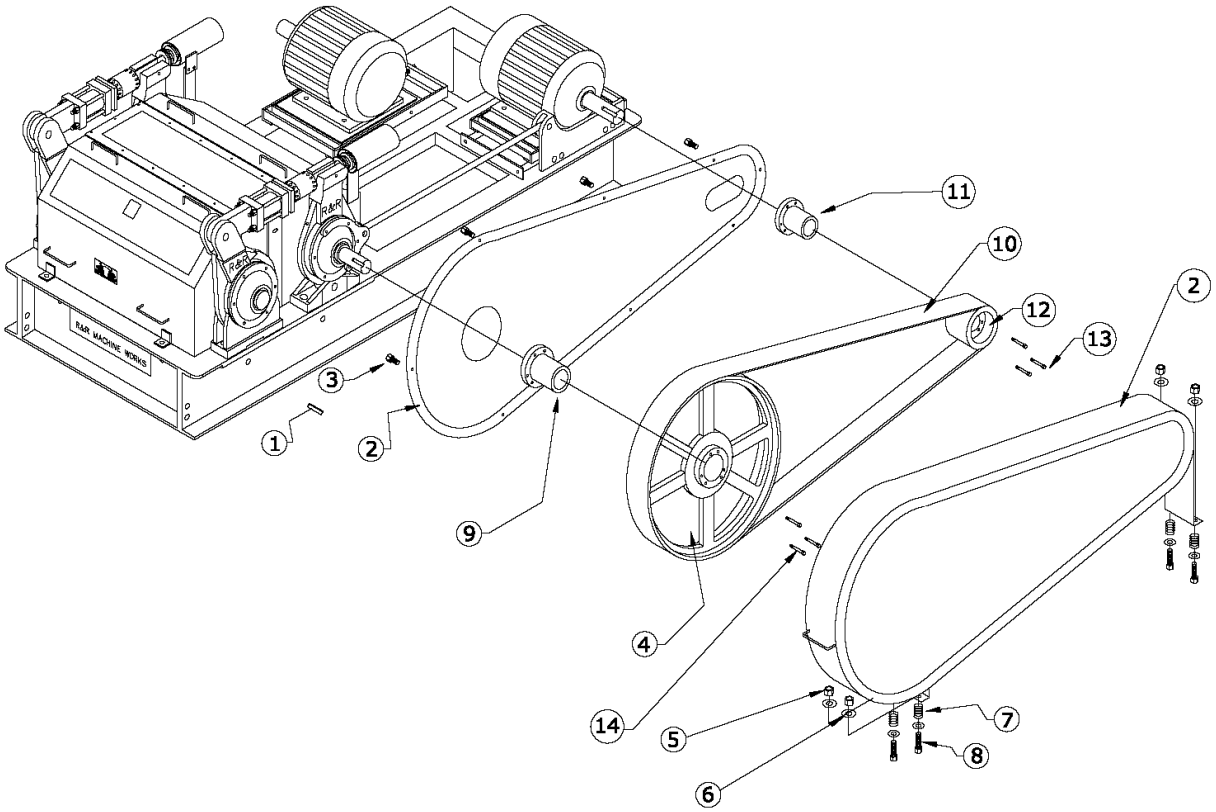

## Belt / Sheave Assembly
## 1200 RPM C BELTS

| # | PART # | DESCRIPTION |
|---|---|---|
| 1 | KY7858 | 7/8” X 5/8”KEY STOCK |
| 2 | GAR20DC | 18”/20” DUAL DRIVE GUARD |
| 3 | BOL38X3/4 | 3/8” X 3/4” BOLT |
| 4 | SH4CF30 | 4C 30.0 F. SHEAVE |
| 5 | N12CTNL | ½” NYLOCK NUT |
| 6 | WF12 | ½” FLAT WASHER |
| 7 | GARSPR80 | VIBRATION SPRING |
| 8 | BOL12X312 | ½” X 3 ½” BOLT |
| 9 | HBF312 | F 3-1/2 DRIVE HUB |
| 10 | BLTCX180 | (4) CX 180 BELTS |
| 11 | HBE218 | E HUB 2 1/8” (30HP) |
| 11 | HBE238 | E HUB 2 3/8” (40HP) |
| 12 | SH4C85 | 4C 8.5 E SHEAVE |
| 13 | BOLHE | E HUB BOLTS |
| 14 | BOLHF | F HUB BOLTS |

**NOTE:** SPECIFY LEFT OR RIGHT GUARD SIDE WHEN ORDERING.

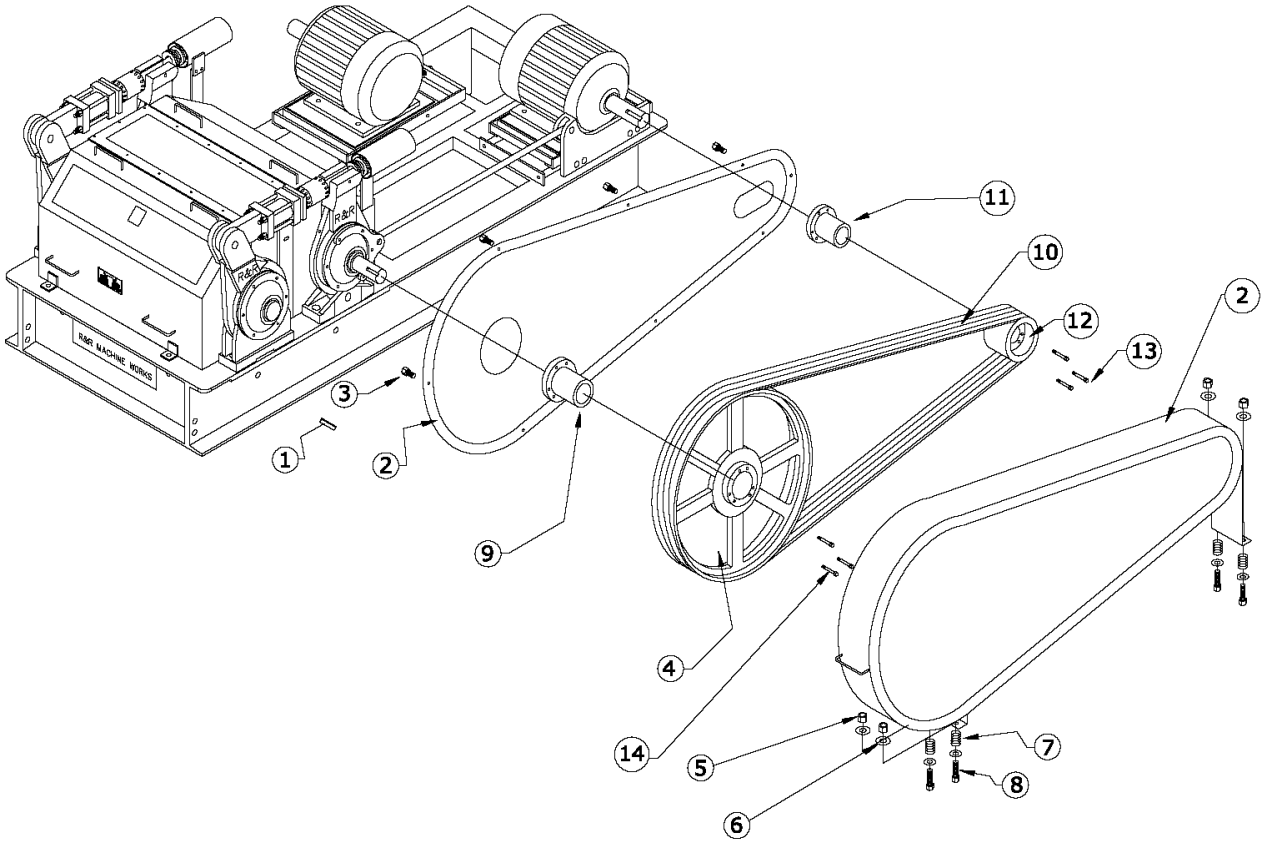

## Belt / Sheave Assembly
## 1440 RPM C BELTS

| # | PART # | DESCRIPTION |
|---|---|---|
| 1 | KY7858 | 7/8” X 5/8” KEY STOCK |
| 2 | GAR20DC | 18”/20” DUAL DRIVE GUARD |
| 3 | BOL38X3/4 | 3/8” X 3/4” BOLT |
| 4 | SH4CF30 | 4C 30.0 F SHEAVE |
| 5 | N12CTNL | ½” NYLOCK NUT |
| 6 | WF12 | ½” FLAT WASHER |
| 7 | GARSPR80 | VIBRATION SPRING |
| 8 | BOL12X312 | ½” X 3 ½” BOLT |
| 9 | HBF312 | F 3-1/2 DRIVE HUB |
| 10 | BLTCX180 | (4) CX180 BELTS |
| 11 | HBSF55 | SF HUB 55MM (18”) |
| 12 | SH4C75 | 4C 7.5 SF SHEAVE |
| 13 | BOLHSF | SF HUB BOLTS |
| 14 | BOLHF | F HUB BOLTS |

**NOTE:** SPECIFY LEFT OR RIGHT GUARD SIDE WHEN ORDERING.

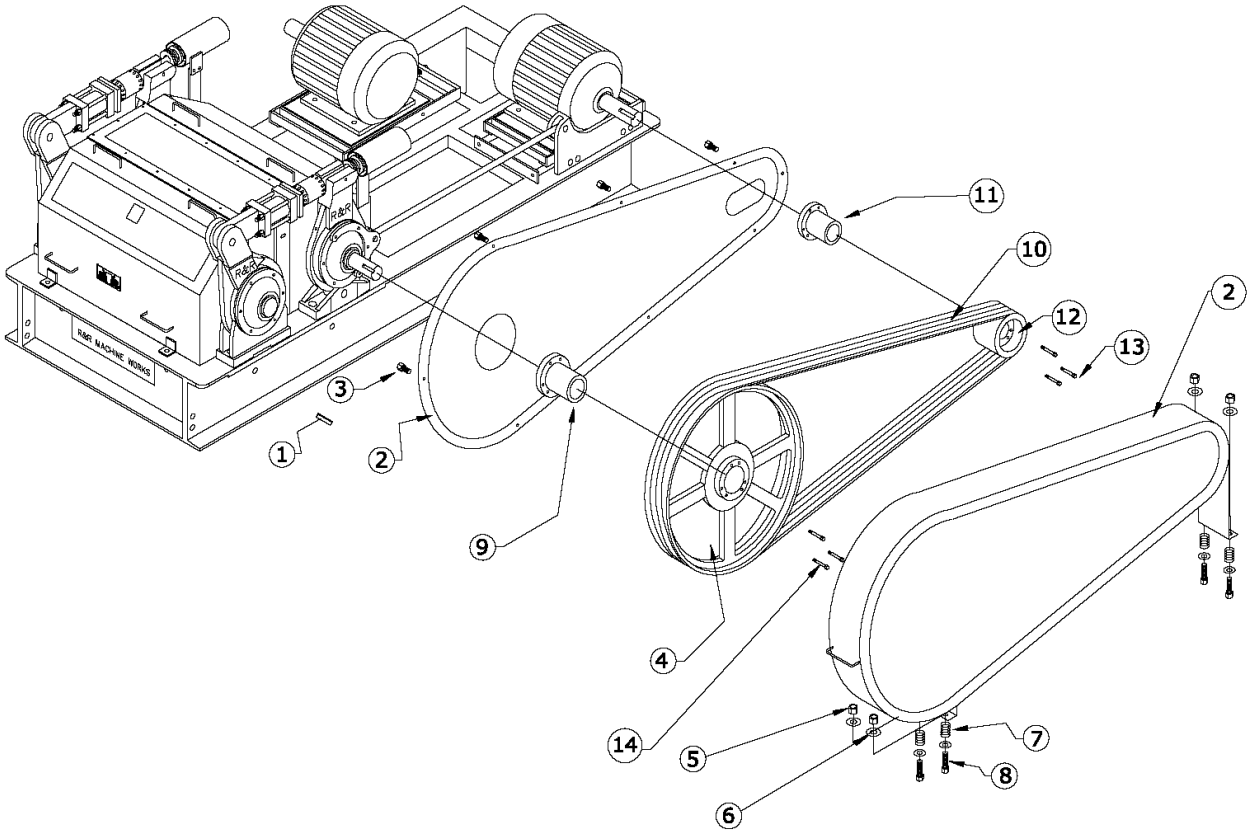

## Belt / Sheave Assembly
## 1800 RPM C BELTS

| # | PART # | DESCRIPTION |
|---|---|---|
| 1 | KY7858 | 7/8” X 5/8” KEY STOCK |
| 2 | GAR20DC | 18”/20” DUAL DRIVE GUARD |
| 3 | BOL38X3/4 | 3/8” X 3/4” BOLT |
| 4 | SH4CF36 | 4C 36.0 F SHEAVE |
| 5 | N12CTNL | ½” NYLOCK NUT |
| 6 | WF12 | ½” FLAT WASHER |
| 7 | GARSPR80 | VIBRATION SPRING |
| 8 | BOL12X312 | ½” X 3 ½” BOLT |
| 9 | HBF312 | F 3-1/2 DRIVE HUB |
| 10 | BLTCX195 | (4) CX 195 BELTS |
| 11 | HBSF218 | SF HUB 2 1/8” (18”) |
| 12 | SH4C75 | 4C 7.5 SF SHEAVE |
| 13 | BOLHSF | SF HUB BOLTS |
| 14 | BOLHF | F HUB BOLTS |

**NOTE:** SPECIFY LEFT OR RIGHT GUARD SIDE WHEN ORDERING.

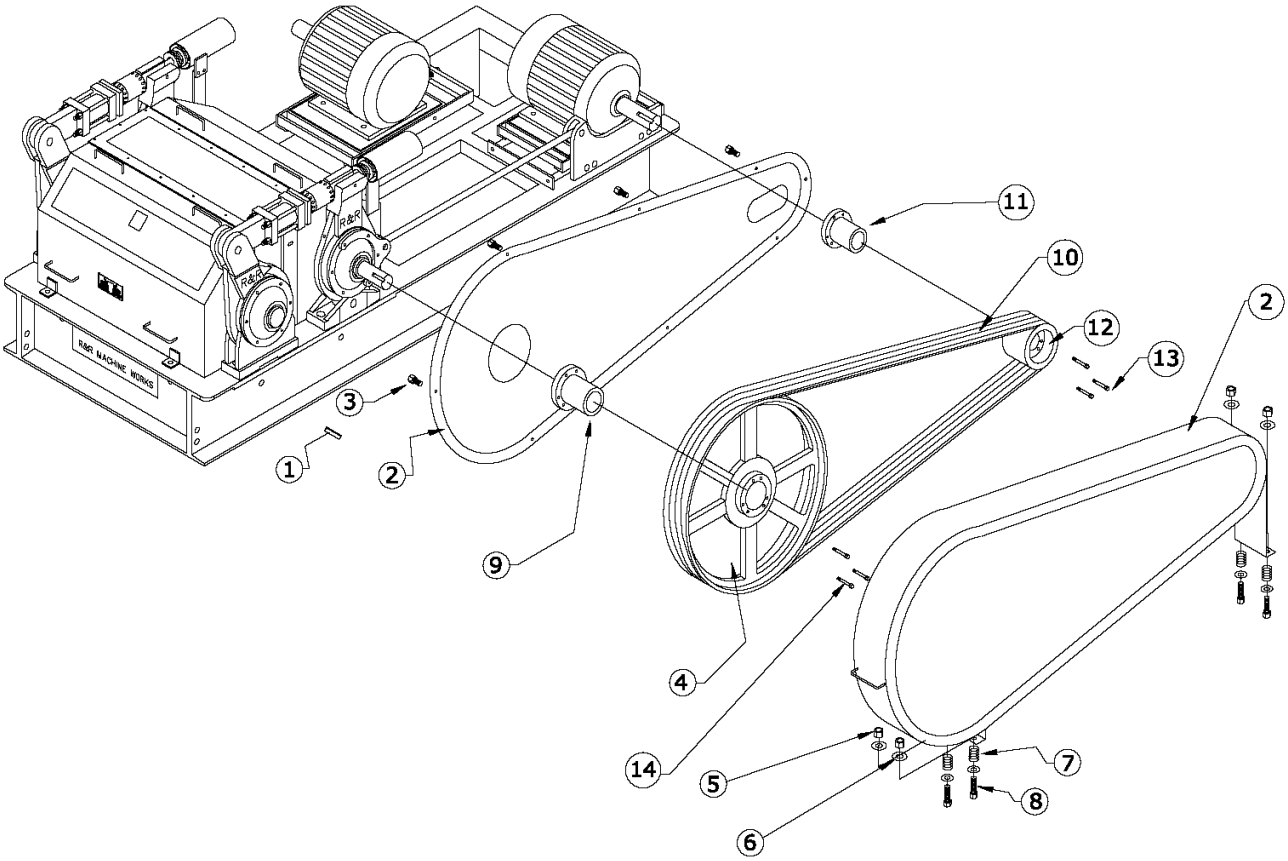

## Yolk Assembly for Sliding Motor Mount

| # | PART # | DESCRIPTION |
|---|---|---|
| 1 | N34CT | ¾” NUT |
| 2 | WL34 | ¾” LOCK WASHER |
| 3 | WF34 | ¾” FLAT WASHER |
| 4 | 24M2001 | BALL JOINT |
| 5 | MTRMHY | MOTOR MOUNT YOLK |
| 6 | BOL58X112 | 5/8” X 1 ½” BOLT |
| 7 | MTRCSA | CONNECTING SHAFT |
| 8 | MTRHYA | HOUSING YOLK |
| 9 | BOL34X3 | ¾” X 3” BOLT |
| 10 | N34JN | 3/4” FT JAM NUT |

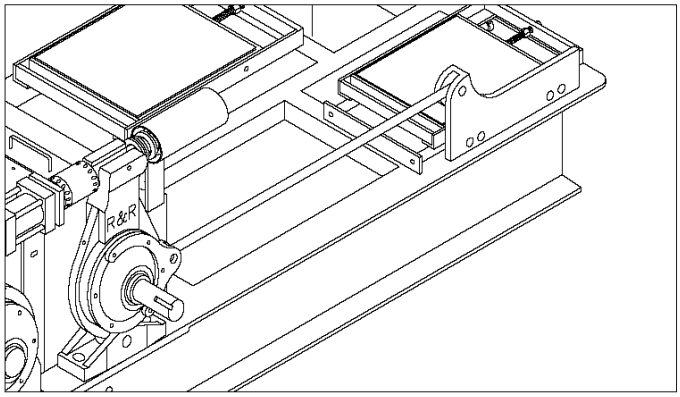


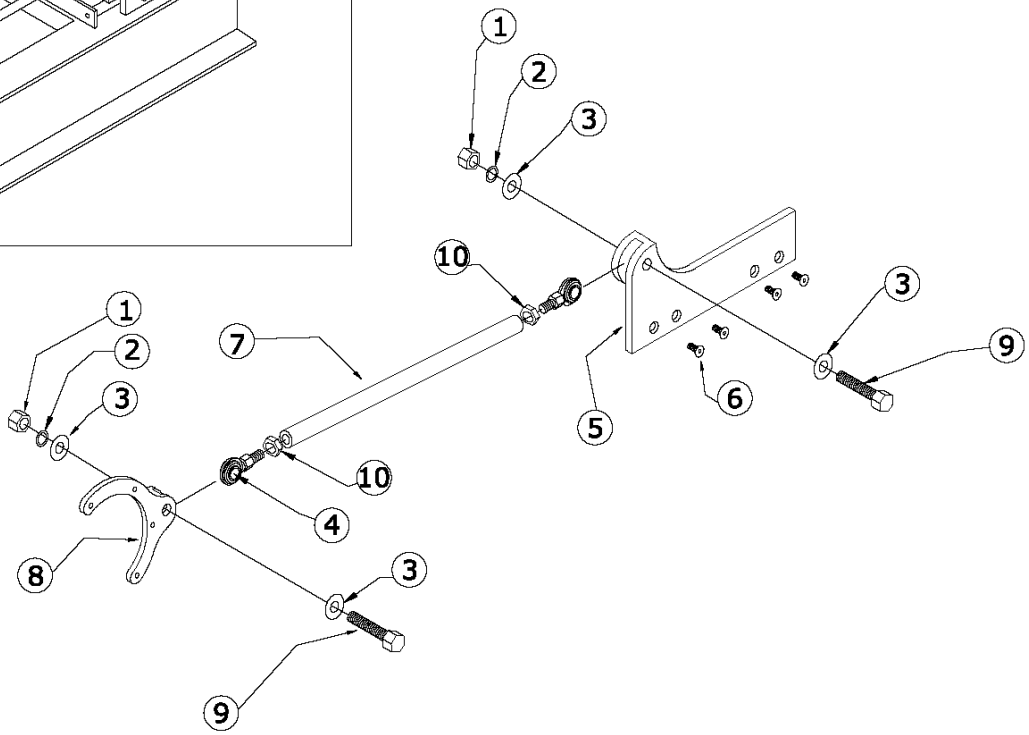

## Drive Assembly for Conventional
## 18 INCH

| # | PART # | DESCRIPTON |
|---|---|---|
| 1 | GAR18D | GUARD ASSEMBLY |
| 2 | HBE218 | E 2 1/8” HUB |
| 3 | SH4C8 | 4 C 8.0 E SHEAVE |
| 4 | BOLHE | E HUB BOLTS |
| 5 | N12CTNL | ½ NY LOCK NUT |
| 6 | BOLHF | SET OF F HUB BOLTS |
| 7 | GARSPR80 | VIBRATION SPRING FOR GUARDS |
| 8 | WF12 | ½ FLAT WASHER |
| 10 | BOL12X312 | ½ X 3-1/2 BOLT |
| 11 | SH4CF36 | 4 C36 F SHEAVE |
| 12 | HBF312 | F 3-1/2 HUB |
| 13 | KY7858 | 7/8 X 5/8 KEYSTOCK |
| 14 | BLTCX144 | 4 CX 144 BELT |
| 15 | BOL38X3/4 | BOLT 3/8 X 3/4 |
| 16 | WL38 | 3/8 LOCKWASHER |
| 17 | KY58 | 5/8 KEYSTOCK |

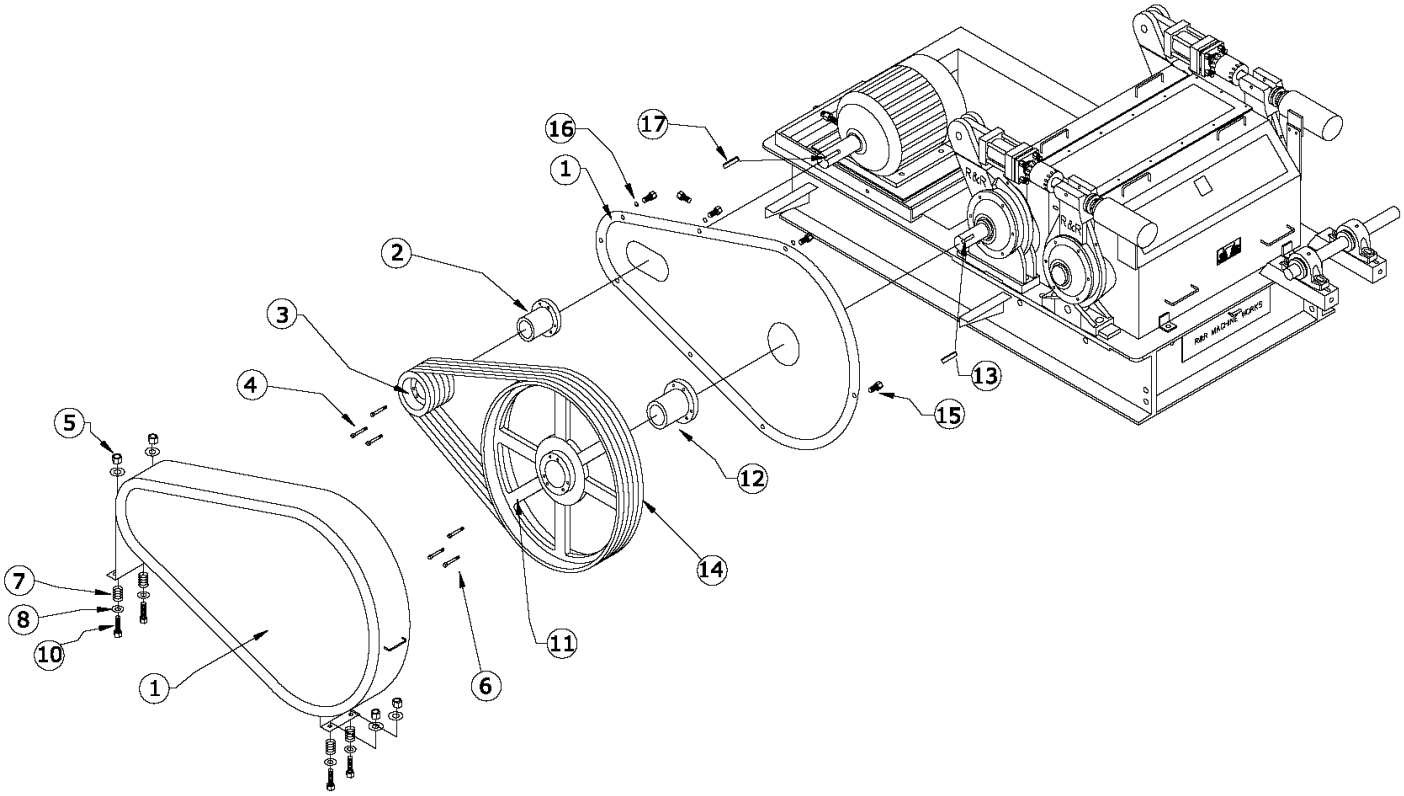

## Idler Belt Assembly for Conventional Drive Side
## 18 INCH

| # | PART # | DESCRIPTON |
|---|---|---|
| 1 | BOL38X34 | 3/8” BOLT |
| 2 | GAR18I | IDLER GUARD |
| 3 | HBE11516 | E 1 15/16” HUB |
| 4 | SH4CE16 | 4C 16.0  E SHEAVE |
| 5 | BOLHE | E HUB BOLTS |
| 7 | N12CTNL | ½” NYLOCK HEX NUT |
| 8 | WF12 | ½” FLAT WASHER |
| 9 | GARSPR80 | VIBRATION SPRING |
| 10 | WF12 | ½” FLAT WASHER |
| 11 | BOL12X312 | ½” X 3 ½” BOLT |
| 12 | HBE234 | E 2 3/4” HUB |
| 13 | KY58 | 5/8” KEYSTOCK |
| 14 | BLTCC120 | (4) CC120 BELT |
| 15 | SH4CE12 | 4C 12.0 E SHEAVE |

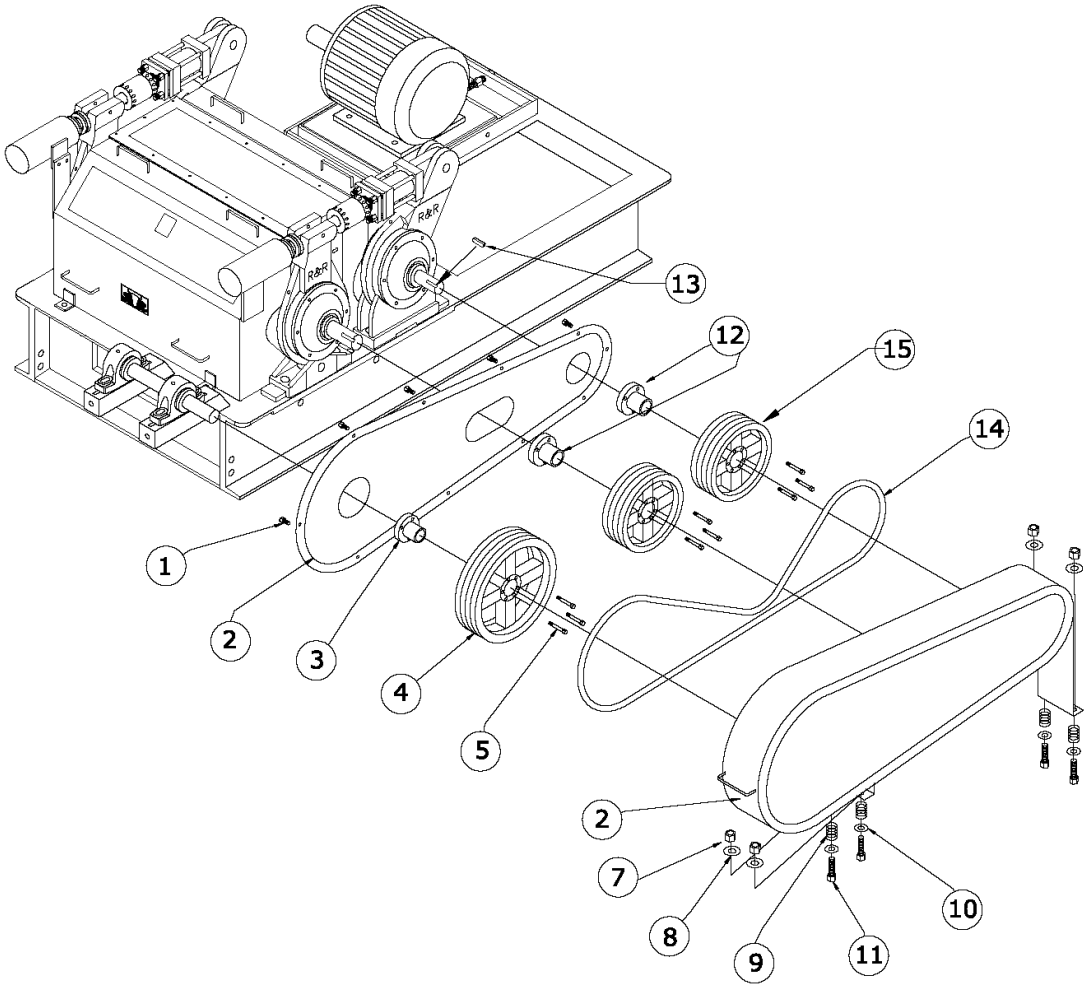

## Conventional Idler Side
## 18 INCH

| # | PART # | DESCRIPTON |
|---|---|---|
| 1 | IDL03 | IDLER INSERT |
| 2 | IDL04 | IDLER BRACKET |
| 3 | BRG11516 | 1-15/16 PB BEARING |
| 4 | WF58 | 5/8 FLAT WASHER |
| 5 | BOL58X212G8 | 5/8X2-1/2 GR8 BOLT |
| 6 | WL58 | 5/8 LOCK WASHER |
| 7 | IDL01 | IDLER SHAFT |
| 8 | GARISA | IDLER SHAFT GUARD |
| 9 | BOL38X112 | 3/8 X 1-1/2 BOLT |
| 10 | WL38 | 3/8 LOCK WASHER |
| 11 | WF38 | 3/8 FLAT WASHER |
| 12 | IDL06 | 3/8 X 2 BRACKET TUBE GUSSET |
| 13 | GARIST | ¼ X 2 X 4 TAB (FOR GUARD) |

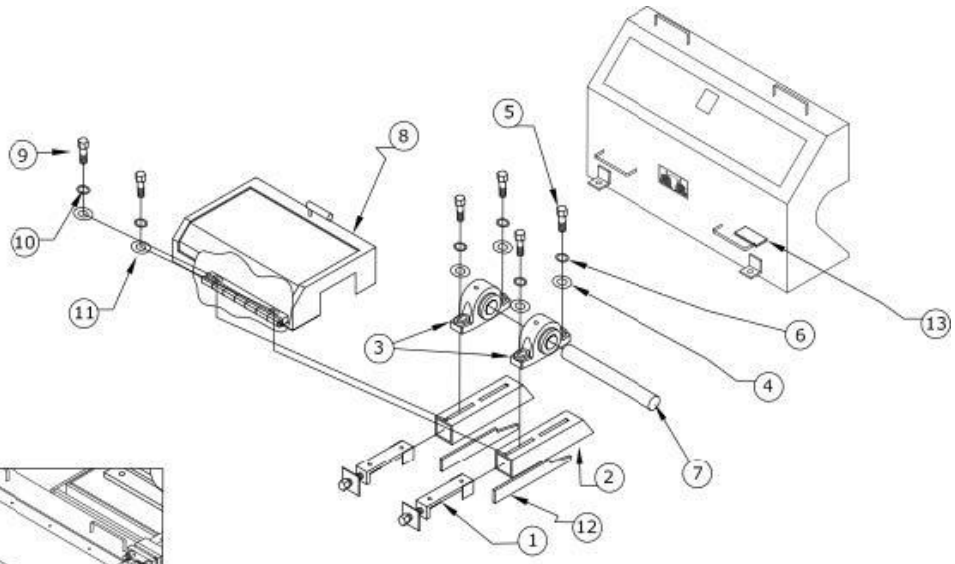


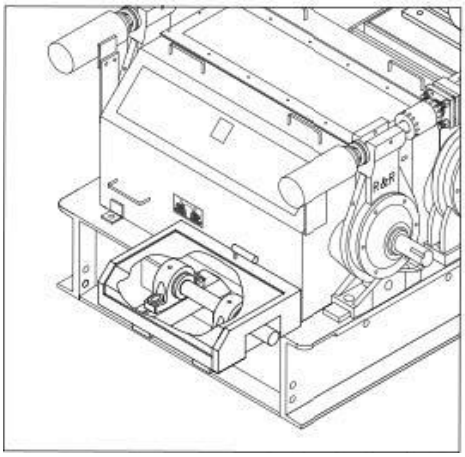

## Hydraulic Hose Parts
### 18 INCH

| # | PART # | DESCRIPTON |
|---|---|---|
| 1 | HYPH22 | 22” HYD. HOSE |
| 2 | HYPH21 | 21” HYD. HOSE |
| 3 | HYFT6MJBH90 | 6MJBH 90 Deg. L FITTING |
| 4 | HYFTBRKTH | 2 1/2” HOSE BRACKET |
| 5 | HYPH36 | 36” HYD. HOSE |
| 6 | HYPH37 | 37” HYD. HOSE |
| 7 | N38CT | 3/8” NUT |
| 8 | WL38 | 3/8” LOCKWASHER |
| 9 | HYFTBRKTB | HOSE BRACKET & CLAMP |
| 11 | BOL38X112 | 3/8 X 1 1/2 BOLT |
| 12 | HYFTBRKTT | TEE HYD. BRACKET |
| 13 | HYFT6MJBH6MJT | 6MJBH-6MJT FITTING |
| 14 | HYPH55 | 55” HOSE |
| 15 | HYPH54 | 54” HOSE |
| 16 | HYFT6MJ8MP45 | 6MJ-8MP45 FITTING |
| 17 | HYFT6MJ8MP | 6MJ-8MP FITTING |

***NOTE: 6MJBH FITTINGS NEED HYFT6LN—6LN BULKHEAD NUT**

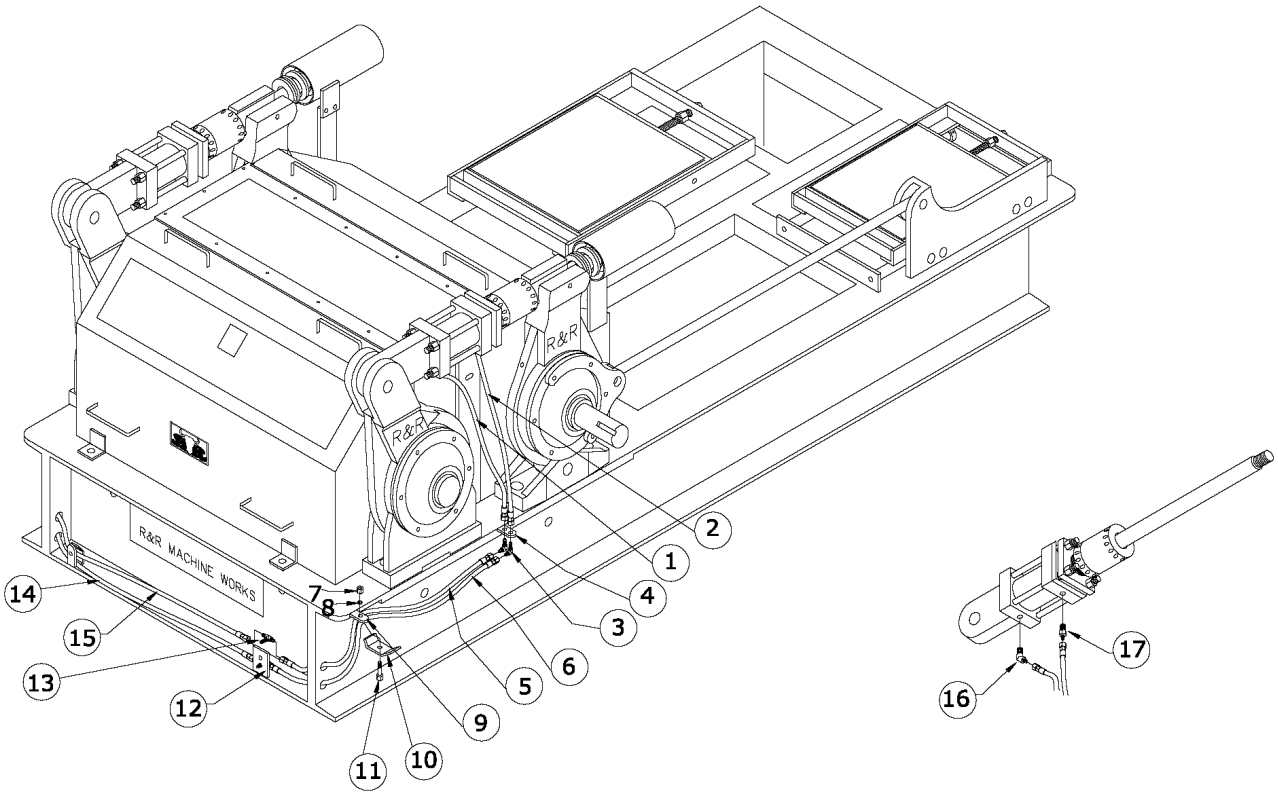

## Hydraulic Cylinder Parts
### 18 INCH

| # | PART # | DESCRIPTON |
|---|---|---|
| 1 | HY18BRL | HONED BARREL |
| 2 | HY18CS34 | 1-3/4 CHROME SHAFT |
| 3 | HY18CVW | WELD ON CLEVIS |
| 4 | HY18RG | ROD GLAND |
| 5 | HY18AP | ALUMINUM PISTON |
| 6 | HY18PN | TOP LOCK PISTON JAM NUT |
| 7 | HY18EP | ROD END PLATE |
| 8 | HYO226B | 226 BACKUP SEAL RING |
| 9 | BOL58X1238 | TIE BOLTS |
| 10 | HY18ADRP | 5/8 RETAINER PLATE |
| 11 | N58FT | 5/8 NUT |
| 12 | WL58 | 5/8 LOCKWASHER |
| 13 | HYU21316314 | PISTON U SEAL |
| 14 | HYO234 | 234 O-RING |
| 15 | HYO234B | 234 BACKUP SEAL RING |
| 16 | HYO214 | 214 O-RING |
| 17 | HYU138134 | ROD U SEAL |
| 18 | HYW138134 | WIPER |
| 19 | HY0226 | 226 O-RING |
| 20 | N114FTA | LOCK JAM NUT |
| 21 | HY18SPG | HYD. SPRING |
| 22 | HY18SPGWM | SPRING WASHER |
| 23 | WF114 | FLAT WASHER |
| 24 | HY18SFTP | SHAFT PROTECTOR |
| 25 | HY18ADNC | 18” ADJUSTING NUT – COARSE THREAD |
| | HY18SL3 | 18”/20” #3 SEAL KIT |

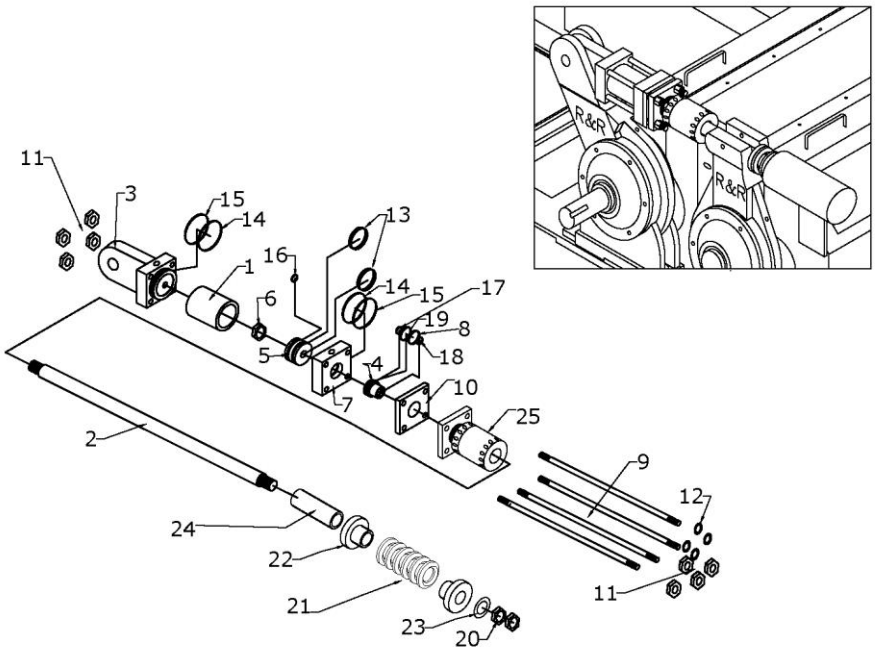

# Limited Warranty

The manufacturer warrants this equipment to the original user against material or workmanship for a period of 30 days from the date of purchase on repair parts and labor. The manufacturer's responsibility under this warranty is limited to the repair or replacement of defective part or parts.

The manufacturer reserves the right to determine whether the part or parts failed because of material, workmanship, or other causes. Failure caused by accident, alteration, or misuse is not covered by this warranty.

A DALHART R&R MACHINE WORKS, INC. representative must perform all warranty repairs. Any repair to the equipment other than by this authorized facility voids this warranty. The rights under this warranty are limited to the original user and may not be transferred to subsequent owners.

The warranty is in lieu of all other warranties, expressed or implied, including warranties for a specific purpose.

# 18 X 30 Flaker
# Operator's Manual
# and Parts Guide

Corporate Office:
P.O. Box 1330
1006 Liberal Street
Dalhart, TX  79022

Phone:  (806) 244-5686
Fax:  (806) 244-6096

www.r-rmachine.com
sales@r-rmachine.com